Network softwarization and slicing in 5G

Georgios Patounas
Simula Research Laboratory
gpatounas@simula.no

Outline

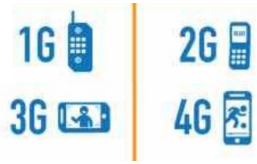

Mobile networks evolution

The next generation

Softwarization

Slicing

A brief history of mobile networks

		Users	Providers
1G	Analog phone calls	Mobility	New market
2G	Digital calls, messaging, data	Security, Accessibility	Capacity for more users, efficiency
3G	Better data, new use-cases	Performance, use cases	Use cases, value added services
4G	Better data, New use-cases	Performance, use cases	Use cases, value added services

Use cases are diverging

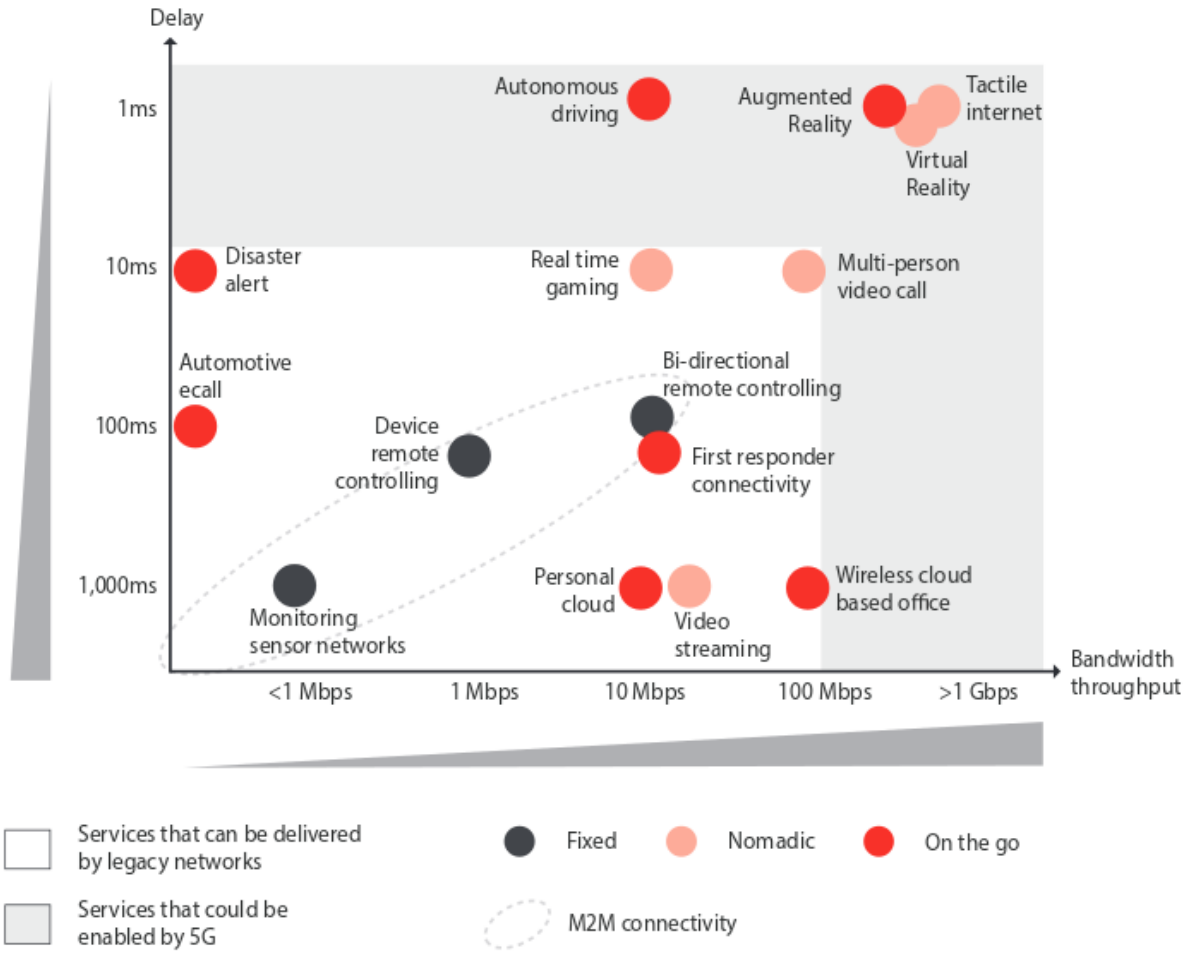

Bandwidth and latency requirements of potential 5G use cases [1]

Current mobile networks are inflexible

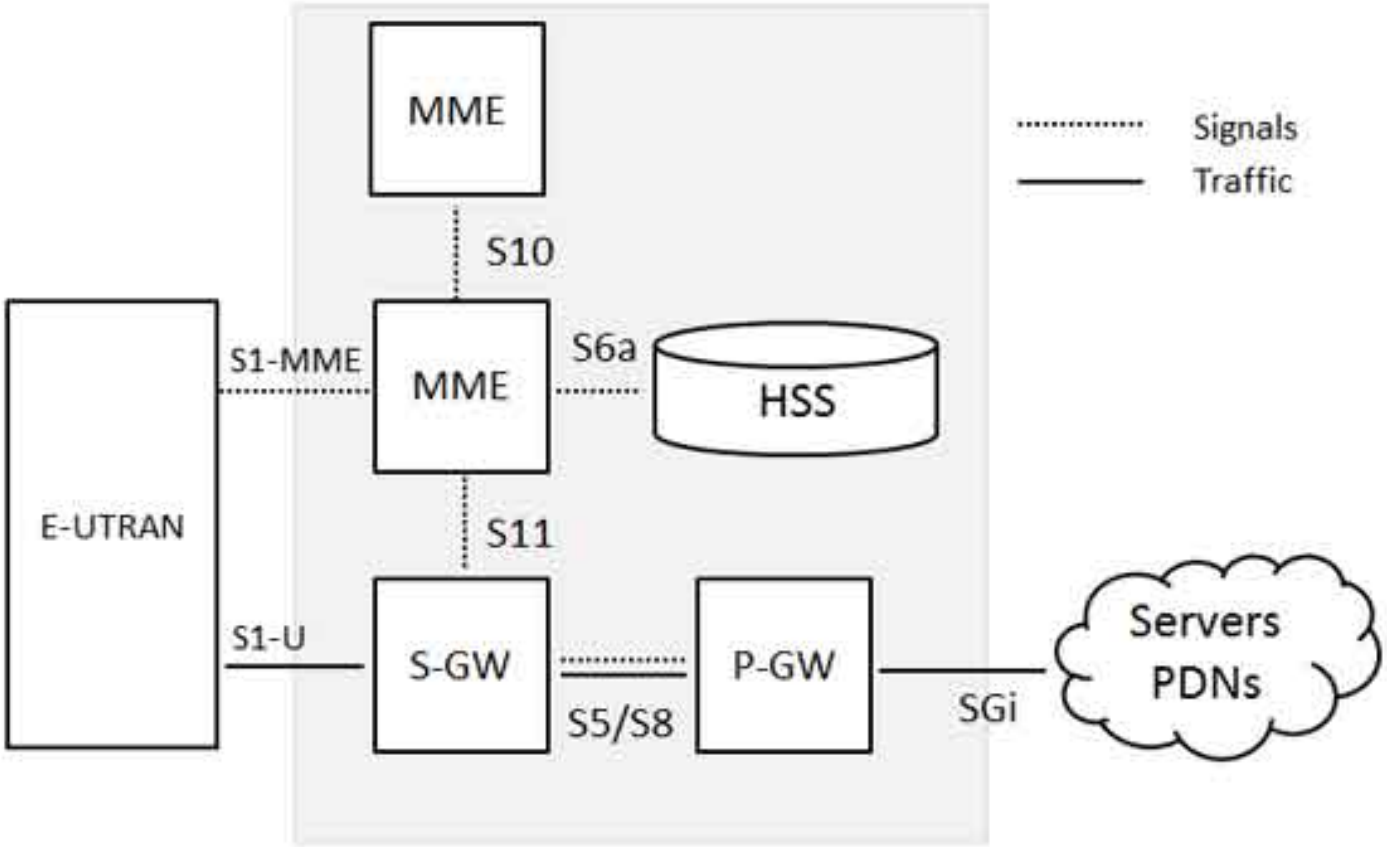

Components of the 4G architecture
[https://www.tutorialspoint.com/lte/lte_network_architecture.htm]

What can softwarization offer

Lower cost ?

Higher efficiency ?

Better scalability

Better flexibility

Reliability ?

Research topics

What is the NF architecture going to look like?

How will providers design their networks?

How will the networks map to functions?

How will infrastructure map to functions?

Each use-case brings a different set of requirements

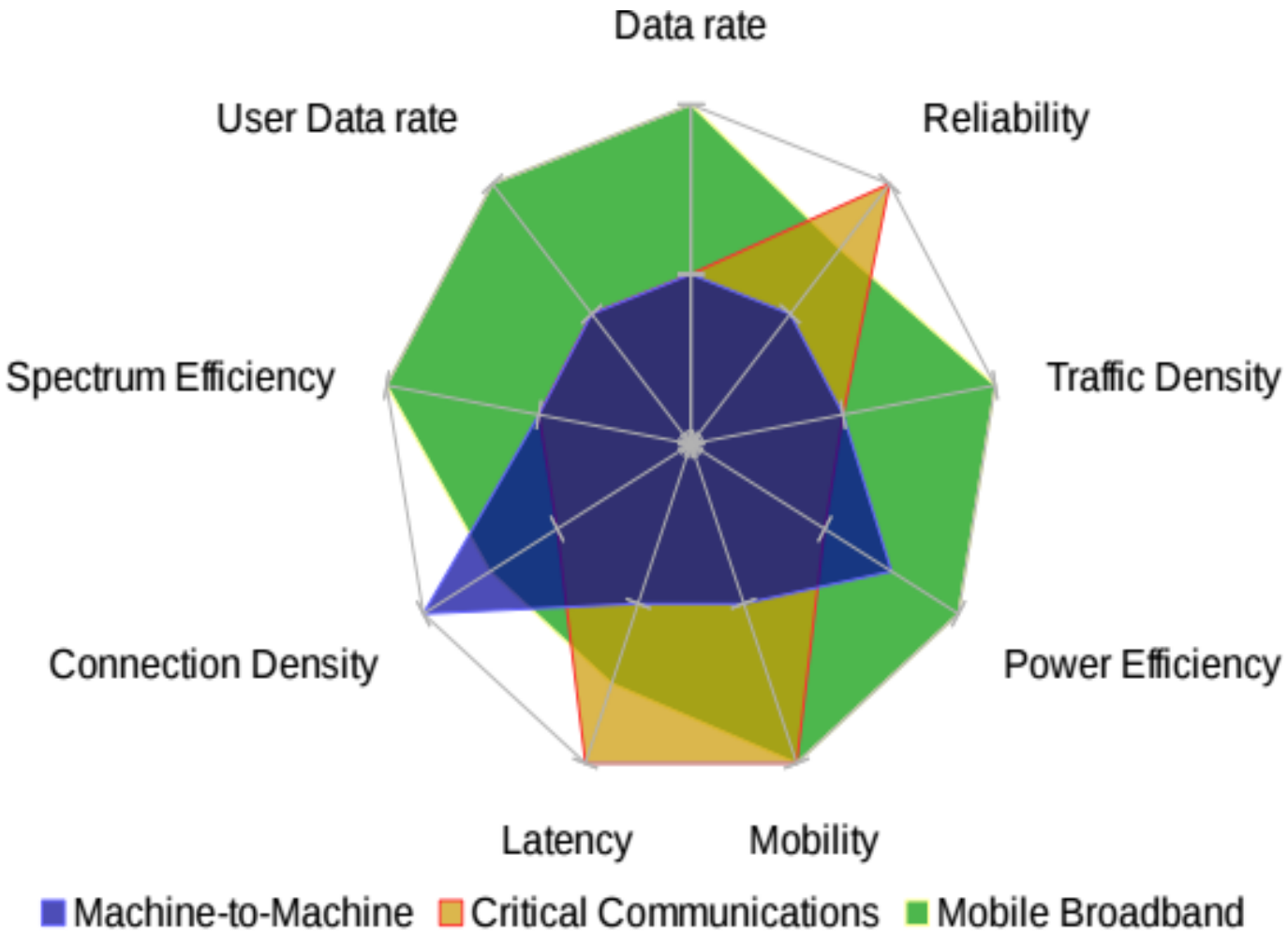

Key 5G use cases and their requirements [2,3]

Slicing can help accommodate use-cases

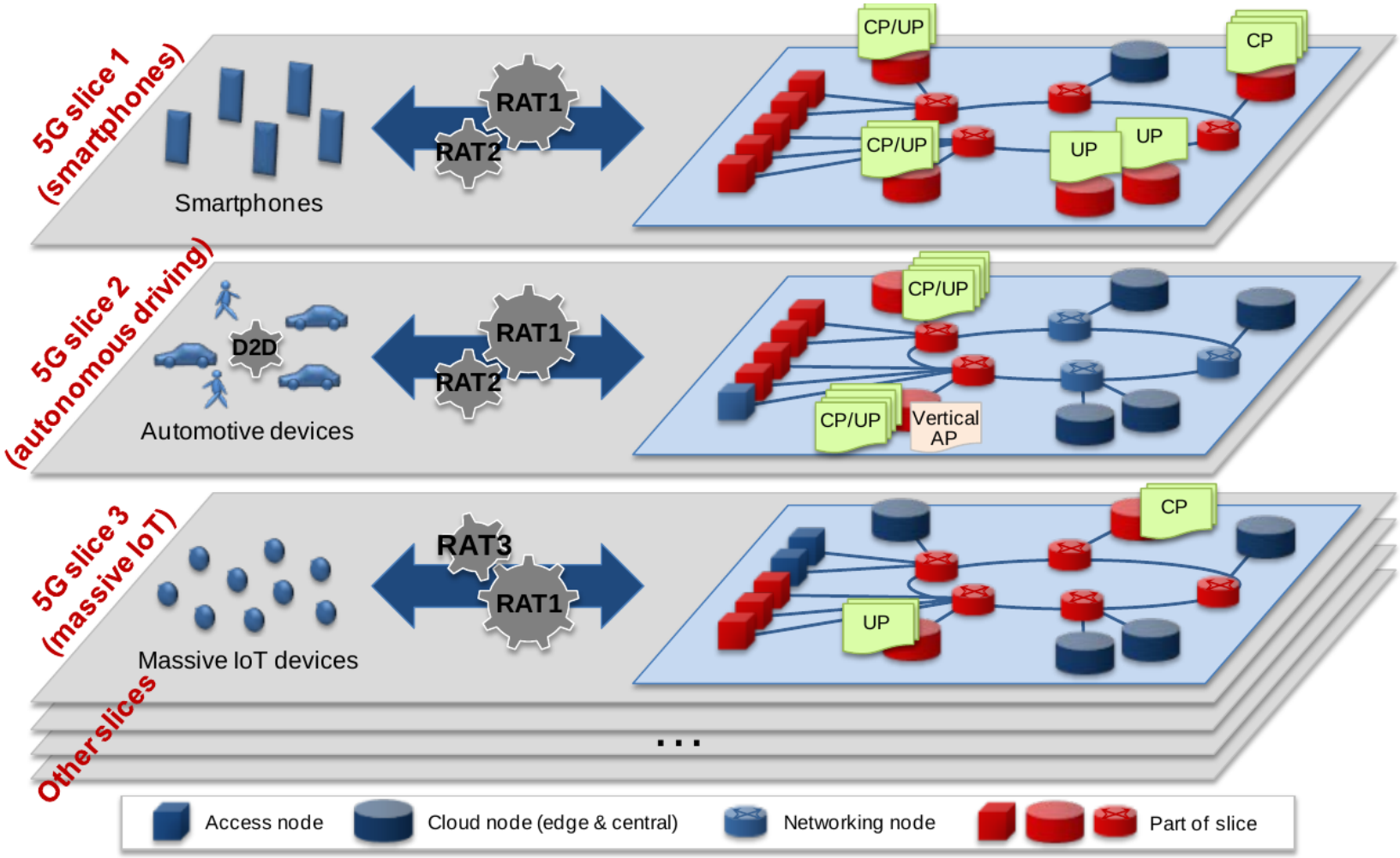

Network slices implemented on the same infrastructure [1]

Generic 5G architecture

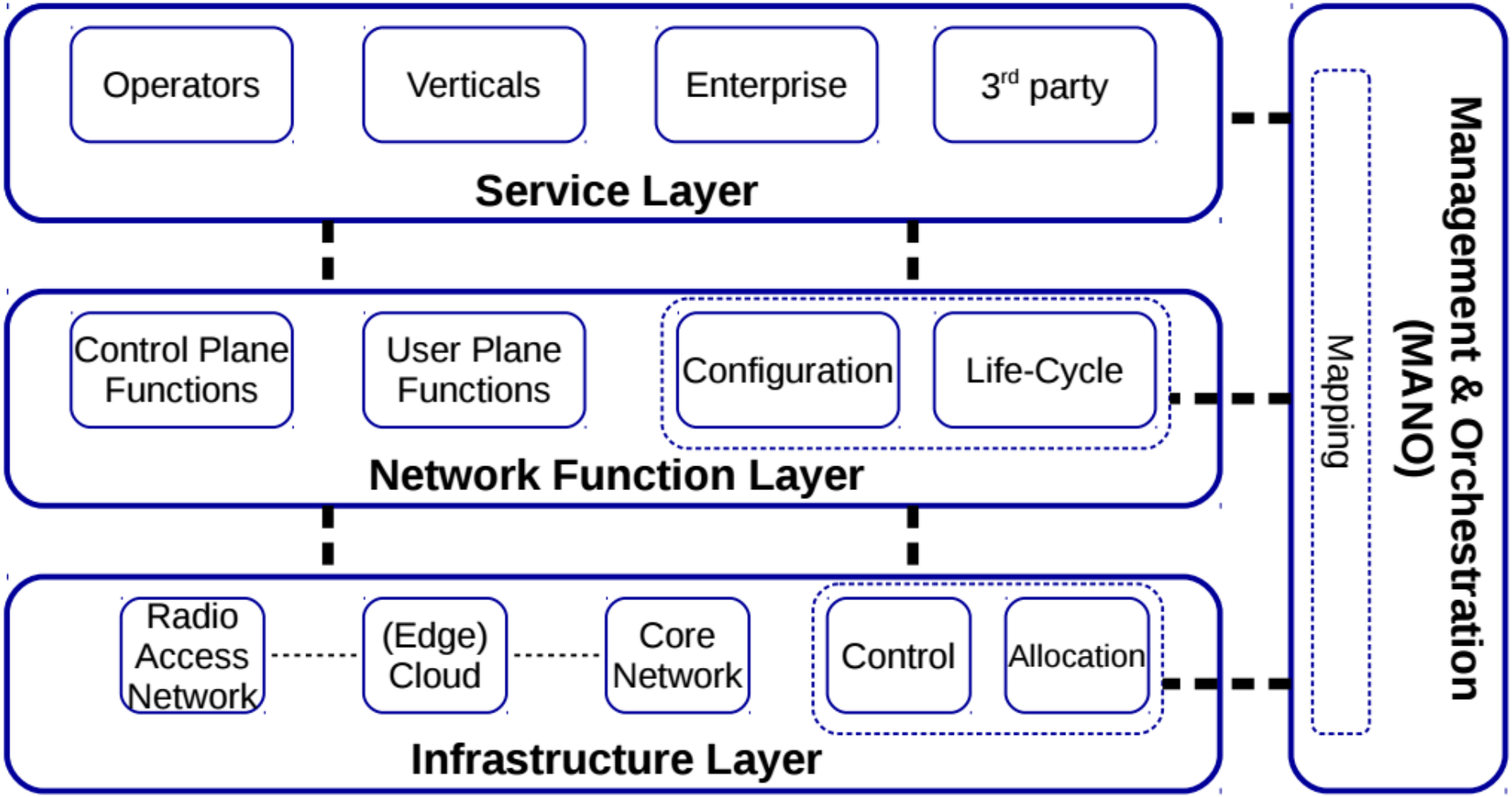

5G architectural framework [2]

A more standardized and capable measurement framework is needed

How will management and orchestration work?

How do we determine what and where to measure?

How do we actually do it in a efficient way?

How do we use the intelligence?

References

[1] NGMN Alliance. 5G White Paper, Feb 2015.

[2] X. Foukas, G. Patounas, A. Elmokashfi and M. K. Marina, "Network Slicing in 5G: Survey and Challenges," in IEEE Communications Magazine, vol. 55, no. 5, pp. 94-100, May 2017.

[3] ITU-R. IMT Vision – Framework and overall objectives of the future development of IMT for 2020 and beyond, Sept 2015.

[.] 5G PPP Architecture Working Group. View on 5G Architecture, Jul 2016.

[.] A. S. Rajan et al., “Understanding the bottlenecks in virtualizing cellular core network functions,” in Local and Metropolitan Area Networks (LANMAN), 2015 IEEE International Workshop on, 2015, pp. 1–6.

[.] J. Prados-Garzon, J. J. Ramos-Munoz, P. Ameigeiras, P. Andres-Maldonado, and J. M. Lopez-Soler, “Modeling and Dimensioning of a Virtualized MME for 5G Mobile Networks,” IEEE TRANSACTIONS ON VEHICULAR TECHNOLOGY, vol. 66, no. 5, p. 4383, 2017.

[.] Z. A. Qazi, M. Walls, A. Panda, V. Sekar, S. Ratnasamy, and S. Shenker, “A High Performance Packet Core for Next Generation Cellular Networks,” 2017, pp. 348–361.

[.] P. Neves et al., “Future mode of operations for 5G – The SELFNET approach enabled by SDN/NFV,” Computer Standards & Interfaces, Feb. 2017.