UNIK4230: Mobile Communications

Spring 2014

Per Hjalmar Lehne

per-hjalmar.lehne@telenor.com

Mobile: 916 94 909

Multiple Access

Chapter 6.1-6.3

+ extra distributed material

10 April 2014

telenor group

Multiple Access

- Introduction
- FDMA (Frequency Division Multiple Access)
- TDMA (Time Division Multiple Access)
- CDMA (Code Division Multiple Access)
- Spread Spectrum
  - Direct-sequence
  - Frequency Hopping
- OFDMA (Orthogonal Frequency Division Multiple Access)
- Summary

telenor group

Multiple Access

- Introduction
- FDMA (Frequency Division Multiple Access)
- TDMA (Time Division Multiple Access)
- CDMA (Code Division Multiple Access)
- Spread Spectrum
  - Direct-sequence
  - Frequency Hopping
- OFDMA (Orthogonal Frequency Division Multiple Access)
- Summary

telenor group

Introduction

- Multiple Access is divided in two main types:
  - Contentionless: “conflict-free” protocol based on scheduling
    - Ensuring a transmission, whenever made is a successful one and not interfered by another transmission.
    - Used in Mobile systems such as GSM, UMTS and LTE
  - Contention based: “Random access” with various means to resolve conflict for simultaneous transmission
    - In principle, transmission is not guaranteed to be successful
    - Used in WLAN/Wi-Fi systems
    - Also used in mobile system for initial connection set-up
- Contention-type protocols are not treated further

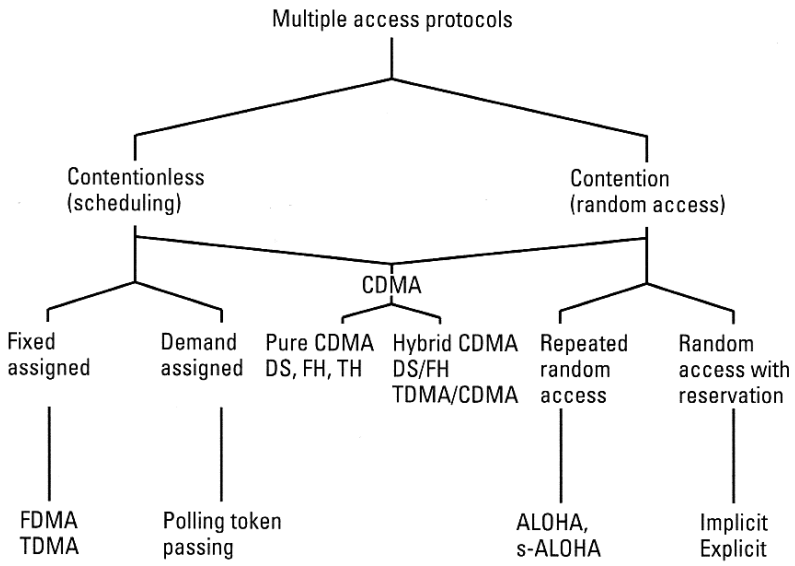

Multiple Access in mobile systems

- When multiple users share same bandwidth, four main techniques are used:
  - FDMA (Frequency Division Multiple Access)
    - Each user is assigned a separate frequency range
  - TDMA (Time Division Multiple Access)
    - Multiple users share the allocated frequency bands, and each user use an allocated time
  - CDMA (Code Division Multiple Access)
    - The bandwidth used by all users simultaneously, which is separated by means of code
  - OFDMA (Orthogonal Frequency Division Multiple Access)
    - The bandwidth is divided to the different users as needed

(O)FDMA, TDMA and CDMA

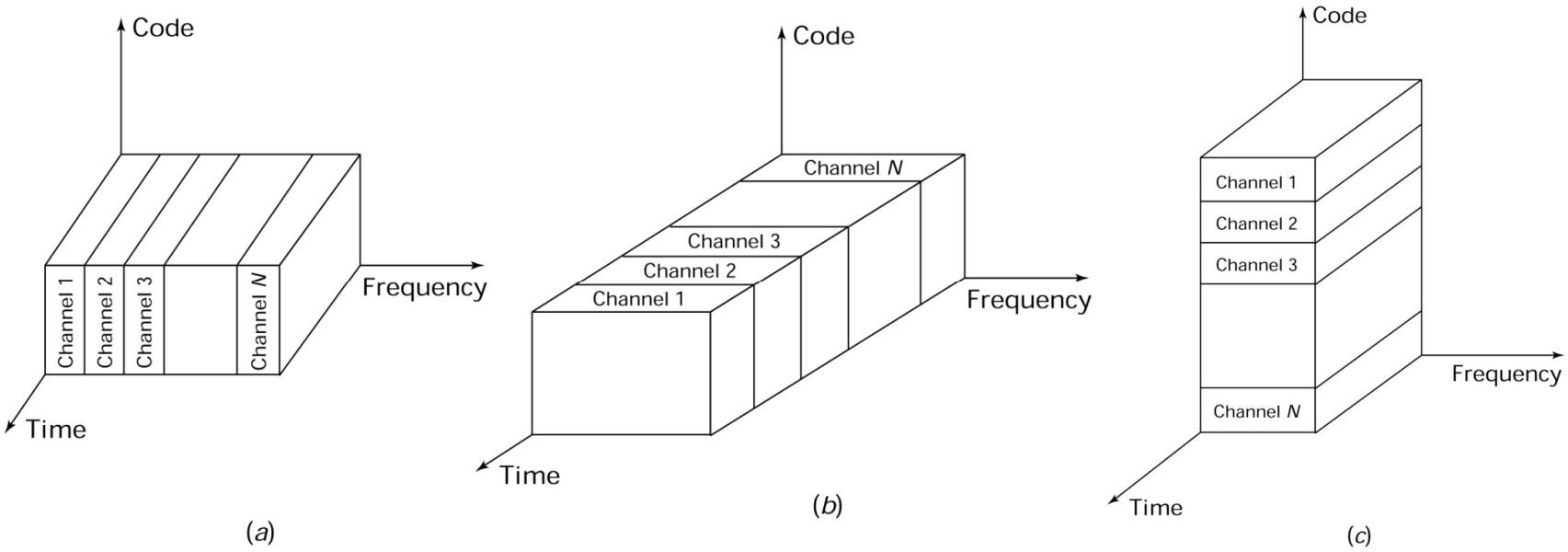

Duplex Transmission

- Communication needs to be in both directions- to and from mobile
  - Forward Channel (Downlink- DL): from Base Station to Mobile
  - Reserve Channel (Uplink- UL): from Mobile to Base Station

- Two types of Duplex systems:
  - FDD (Frequency Division Duplex)
    - Two distinct band of frequencies for each user- one for uplink and one for downlink. These bands are separated by a guard band
  - TDD (Time Division Duplex)
    - Time is used to separate forward and reverse channels
    - Almost continuous transmission is possible since time split between channels are very small.

Duplex Transmission – Using the same antenna for both directions

FDD: A duplexer is needed since same antenna is used for both way transmissions

TDD: No duplexer is needed

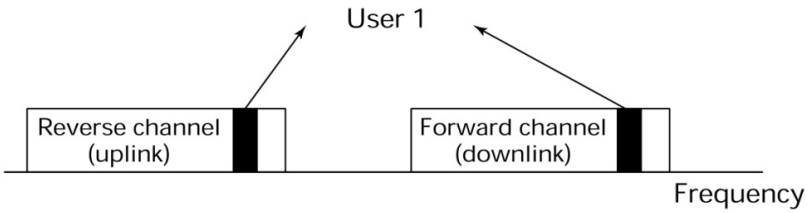

(*a*)

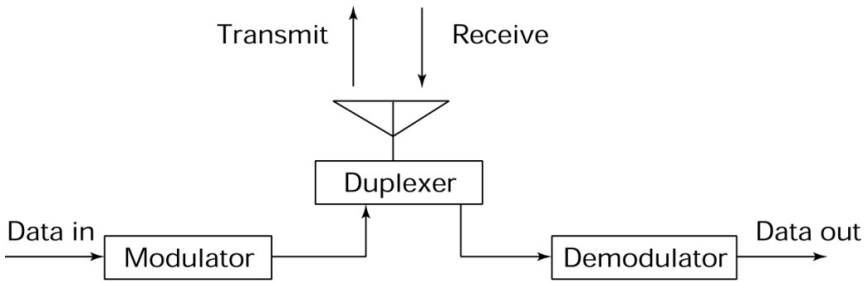

(*b*)

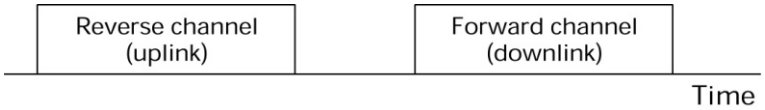

Duplex Techniques and Systems

- Systems are characterized both by its method of multiple access and duplex

- For example
  - FDMA/FDD (e.g. NMT)
  - TDMA/FDD (e.g. GSM)
  - TDMA/TDD (e.g. DECT)
  - CDMA/TDD (e.g. UMTS TDD)
  - CDMA/FDD (e.g. UMTS FDD)
  - OFDMA/TDD (e.g. WiMAX)
  - OFDMA/FDD (e.g. LTE)

Multiple Access

- Introduction
- FDMA (Frequency Division Multiple Access)
- TDMA (Time Division Multiple Access)
- CDMA (Code Division Multiple Access)
- Spread Spectrum
  - Direct-sequence
  - Frequency Hopping
- OFDMA (Orthogonal Frequency Division Multiple Access)
- Summary

telenor group

FDMA

- The available bandwidth W is divided into N non-overlapping bands, each with width W_{ch}
- A small guard band is provided to reduce interference

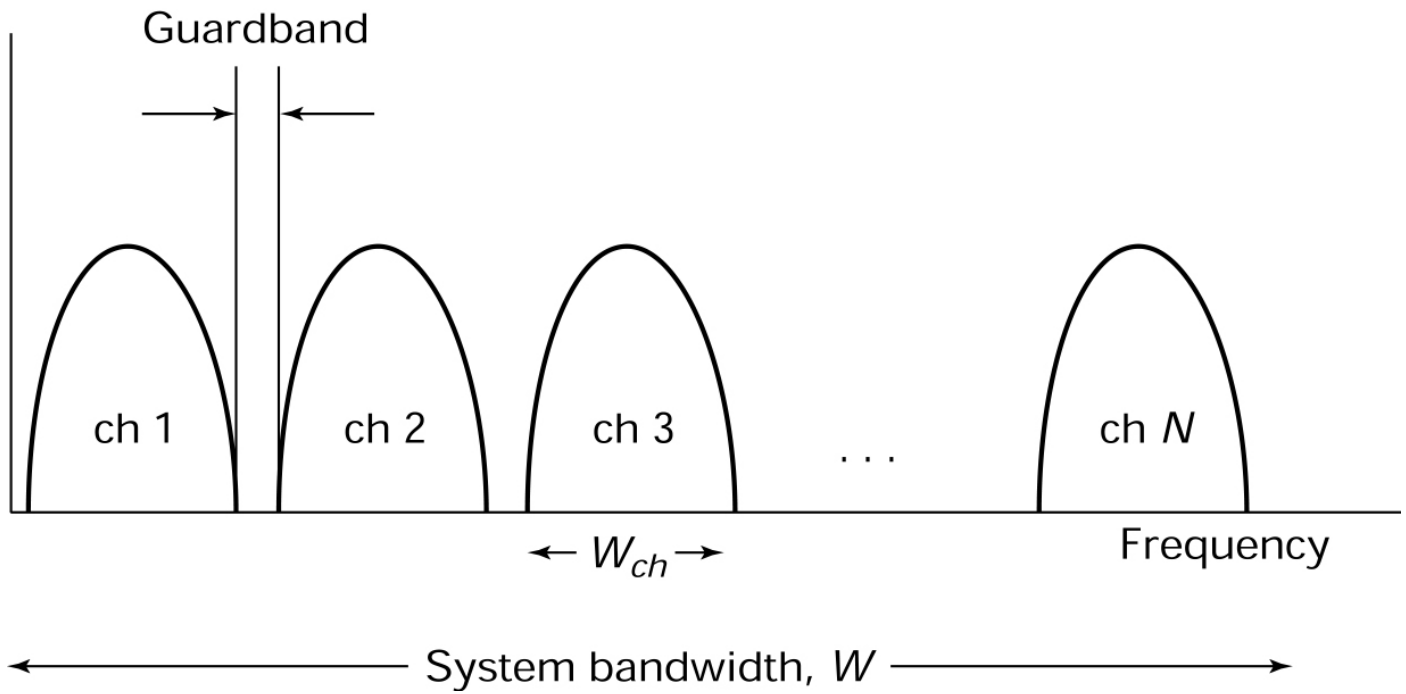

Resource Allocation in FDMA

- During call set-up the user is given an unused channel by the Base Station exclusively
- After termination of call, the channel may be reassigned to another user
- If during the call, the caller moves into another cell, then it will be assigned an unused channel from the new cell
- If FDD is used with FDMA, then the available band is divided in two; one half for downlink and another half for uplink. The caller has one frequency for the uplink and another for downlink

Advantages of FDMA

- The major advantage of FDMA is the “hardware simplicity” since discrimination between users is done by simple bandpass filters
- No timing information or synchronization is required
- Little problem of frequency-selective fading and Intersymbol Interference (ISI) since bandwidth assigned to each user is relatively small

Disadvantages of FDMA

- Inflexible resource allocation:
  - Available channels may not be granted to *existing* users and enhance capacity of the system
  - Dynamic channel assignment may overcome this limitation by assigning unused channels to other cells which needs more capacity
- Inability to be used as variable rate transmission which is common in digital systems. This eliminates FDMA as the choice for combined voice and data transmission
- Filter with excellent cut-off characteristics necessary since FDMA depends on bandpass filters.
- Crosstalk due to interference from neighboring channels produced by nonlinear effects

Crosstalk in FDMA

Crosstalk stems from non-linear amplifiers. For example, a composite signal $c(t)$ at the receiver with 3 channels can be expressed as:

$$c(t) = a_1(t)\cos(2\pi f_1 t) + a_2(t)\cos(2\pi f_2 t) + a_3(t)\cos(2\pi f_3 t)$$

where f_1, f_2, f_3 are carrier freq. and a_1, a_2, a_3 are information bearing signal. The output of a nonlinear amplifier will be:

$$c_{out}(t) = b_0 + b_1[c(t)] + b_2[c(t)]^2 + b_3[c(t)]^3 + \ldots$$

The non-linearities are scaled as b_2, b_3 … which results in non-linear terms as:

$$f_1 = 2f_2 - f_3$$

Or any other combination. Signals from other channels will appear in the same window as the signal being received

telenor group

Multiple Access

- Introduction
- FDMA (Frequency Division Multiple Access)
- TDMA (Time Division Multiple Access)
- CDMA (Code Division Multiple Access)
- Spread Spectrum
  - Direct-sequence
  - Frequency Hopping
- OFDMA (Orthogonal Frequency Division Multiple Access)
- Summary

telenor group

TDMA

- Each user occupies *the whole bandwidth for a fraction of a time*, called a time slot (per frame) and continues to have access to the bandwidth on a periodic basis

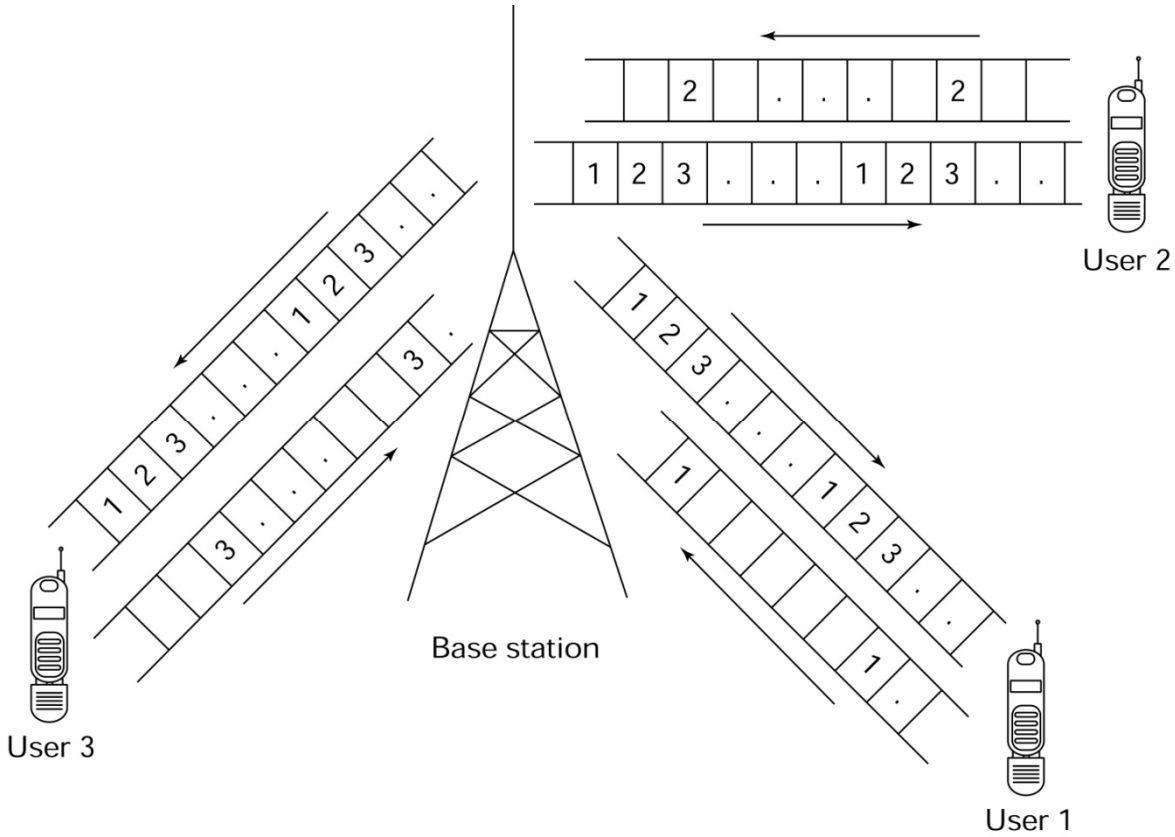

TDMA: Timeslot and Frame

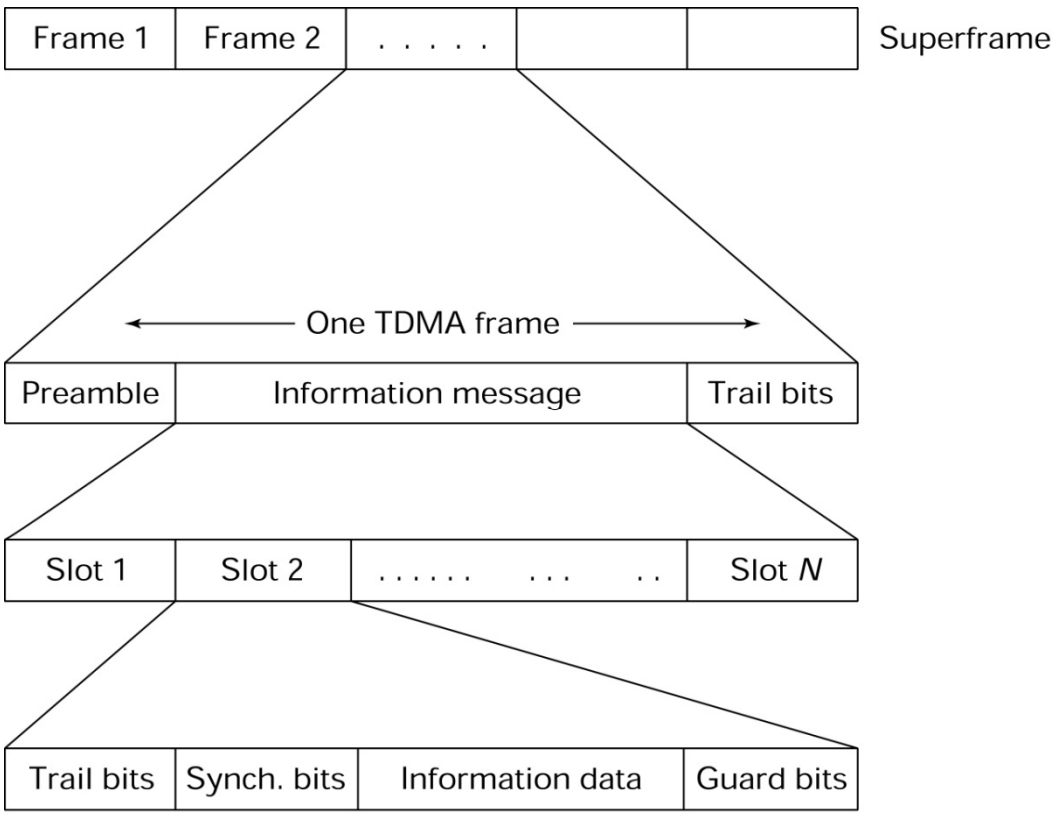

- Preamble:
  - Address and synchronization information
- Guardbits:
  - Necessary to allow non-ideal time synchronization between the mobiles

TDMA and Duplex

- TDMA/TDD
  - Some of the timeslots in the frame will corresponds uplink and the other to downlink within same carrier
  - For telephony, the division between up- and downlink is 50-50
  - For data, the division between up- and downlink can be adjustable, e.g. 30-70
- TDMA/FDD
  - Uplink and downlink will be separate frames on different carrier frequencies

Resource Allocation in TDMA

- During call set-up, user is assigned a free time slot, and use it in each frame
- When moving to the new cell, the user is assigned an available slot in the new cell
- For data transmission with higher data rate, a user may receive more than one time slot per. frame

TDMA in GSM

- GSM is a combined FDMA / TDMA system
- The frequency band is divided into the carrier (carriers) of 200 kHz
  - Different carriers used in different cells
  - For larger capacity requirements, multiple carriers are used in a cell
- Each carrier is divided into eight TDMA timeslots, which together is called a TDMA frame.
- Each frame is 4.615 ms (= 120/26 ms) and each time slot is 0577 ms (= 15/26 ms). A time slot is the smallest unit in GSM
- Each channel uses one time slot per TDMA frame
- Bit-rate on the physical layer in GSM is 270.833 kHz

TDMA Frame Structure in GSM

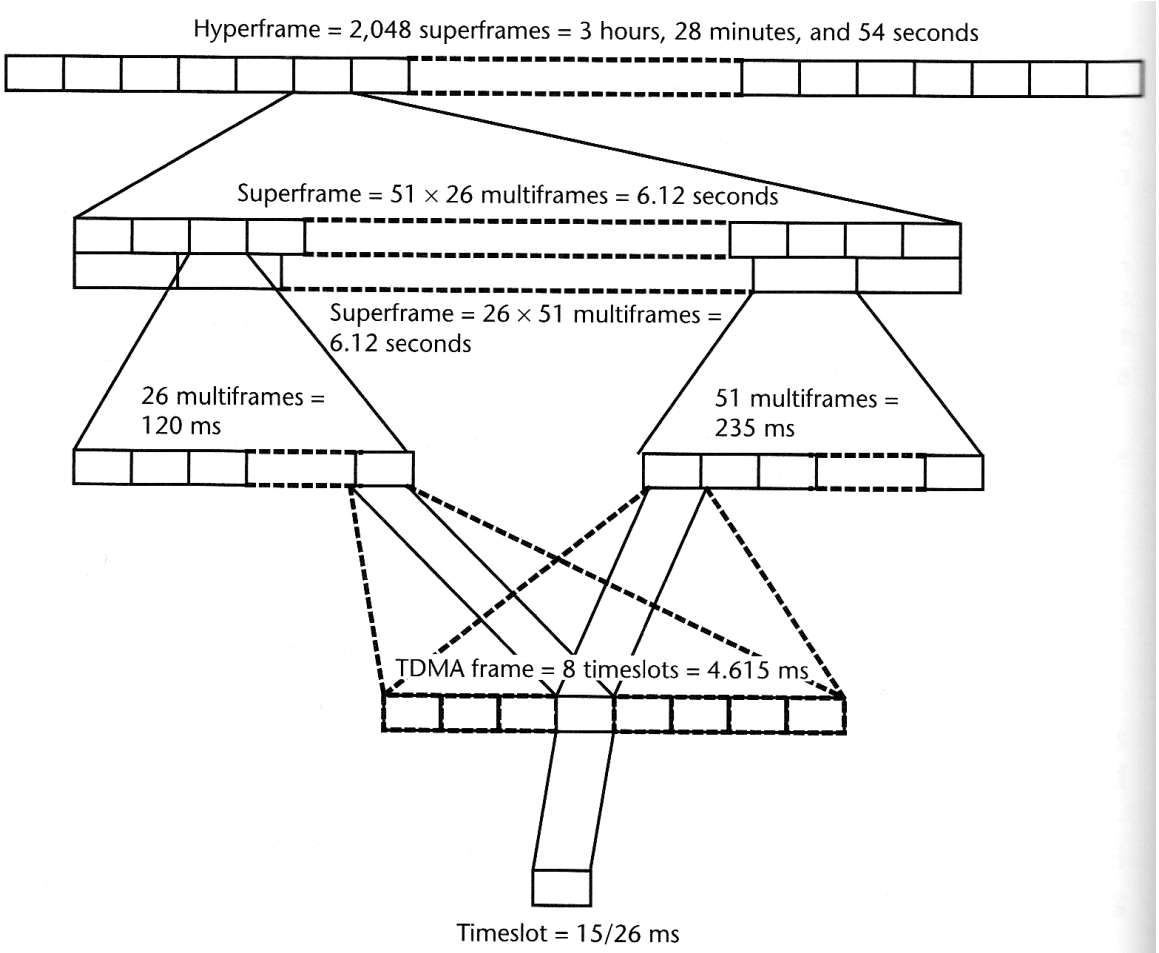

Source: Audestad: Technologies and Systems for Access and Transport Networks, 2008

Advantages and disadvantages of TDMA (compared to FDMA)

- Advantages:
  - Flexibility in resource allocation
    - Based on availability, more time slots can be assigned to the same user. Allows for variable data rate
    - Not so strong cut-off filters requirement, or problems with crosstalk
    - Better utilization of resources. Overhead in the form of guardbits between the time slots and synchronization bit requires less resources than the resulting guardband between the carrier channels in FDMA

- Disadvantages
  - The need for synchronization, both the frames and time slots
  - Wider bandwidth allows more frequency selective fading and ISI

Multiple Access

- Introduction
- FDMA (Frequency Division Multiple Access)
- TDMA (Time Division Multiple Access)
- CDMA (Code Division Multiple Access)
- Spread Spectrum
  - Direct-sequence
  - Frequency Hopping
- OFDMA (Orthogonal Frequency Division Multiple Access)
- Summary

telenor group

CDMA – Code Division Multiple Access

- Multiple users can share the same carrier at the same time when each user multiplies the data stream with a unique *"spreading code"* before sending.
- The data stream can be recreated in the receiver by multiplying by the same spreading code.
- Interference from other users is suppressed because of orthogonality between the spreading code for each user
- Spreading code is a pseudo-random (or pseudo-noise-PN) periodic sequence, each bit in the spreading sequences is called a chip.
- The ratio between the bit length T_b and the chip-length T_c is: $T_b/T_c=K$.
  - This is also called the *Spreading Factor* (SF)
- The bandwidth of the new signal is wider than the original by a factor of K because of high chip rate

CDMA Signal Generation

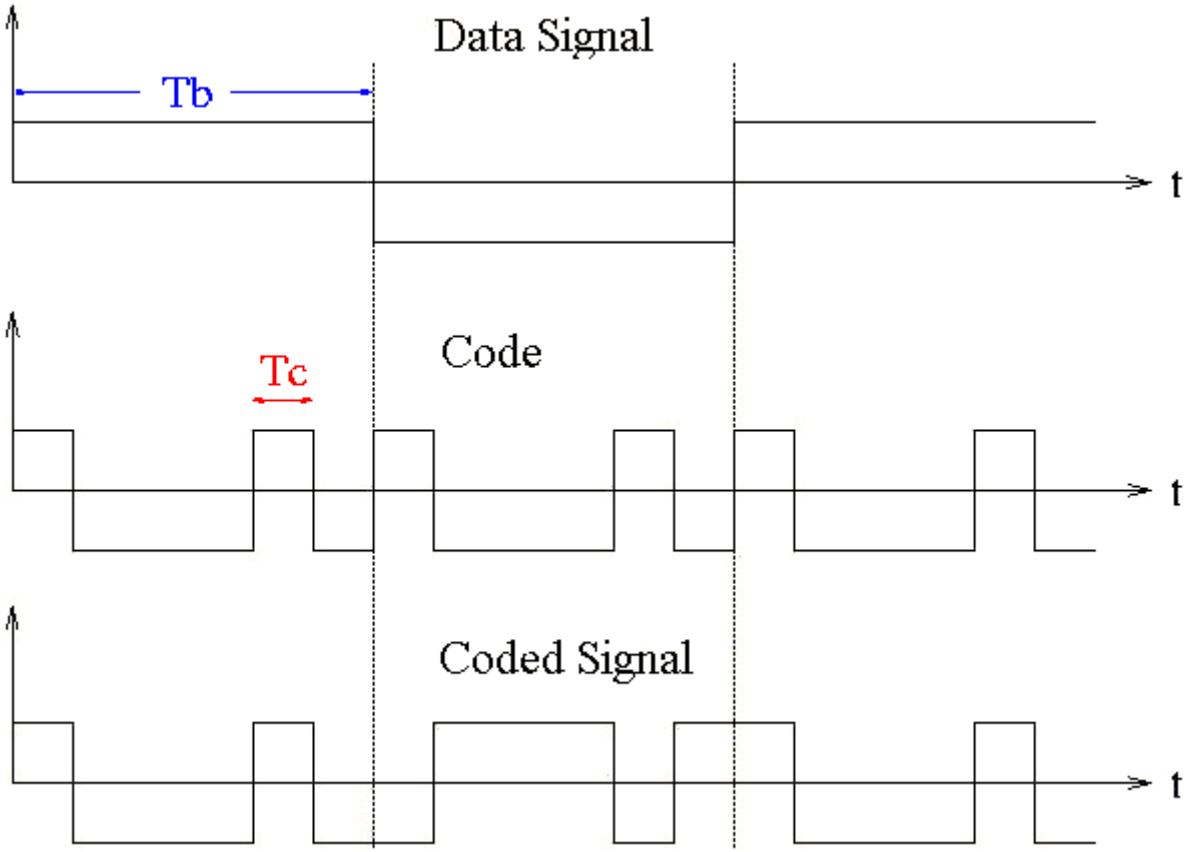

- Information signal
- PN code
- Encoded signal

telenor group

CDMA Signal Generation (II)

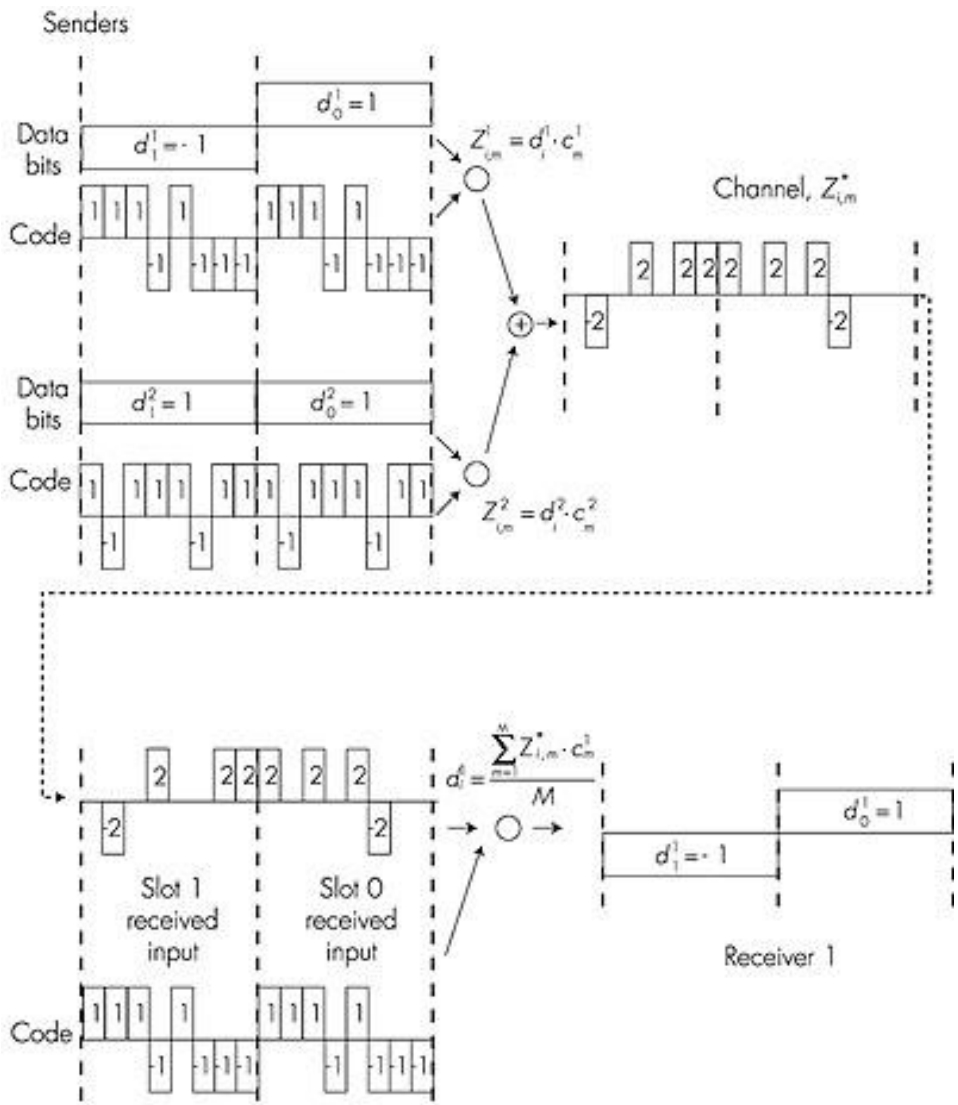

CDMA Spread Spectrum

- Spreading of the spectrum (in freq. domain). Here for the example K=4

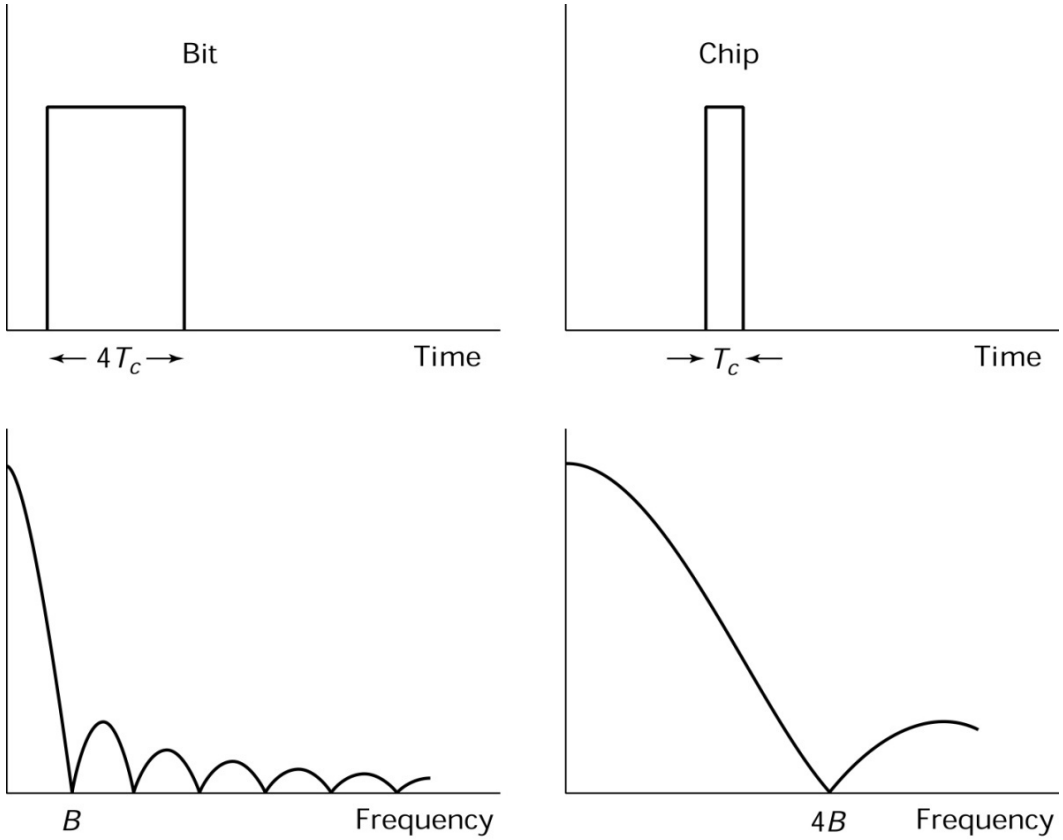

CDMA Transmitter and Receiver

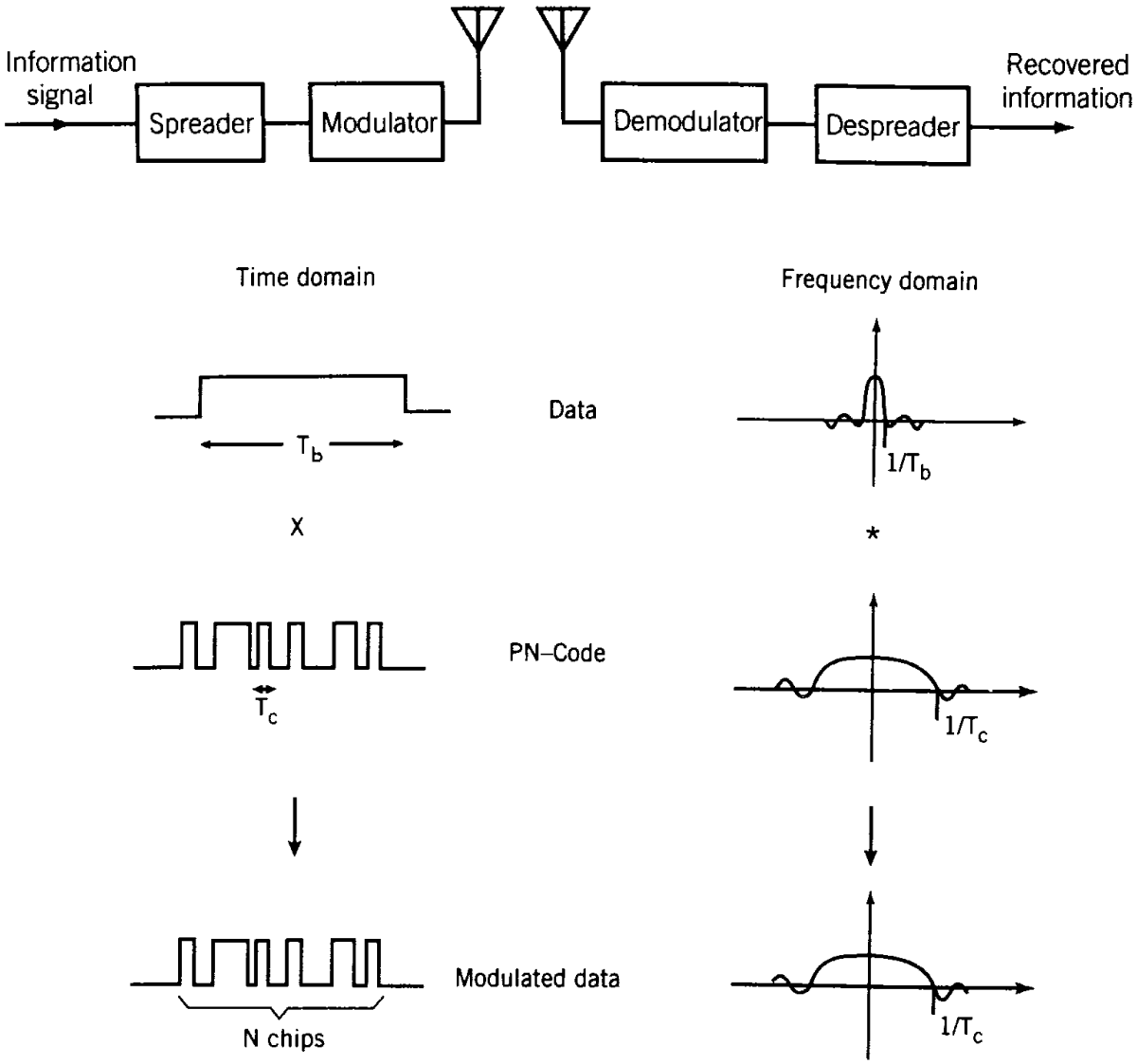

Orthogonality

- Two functions $x_q(t)$ og $x_k(t)$ are orthogonal over an interval [a,b] if the *inner-product* is 0 (zero) for all q og k, except when $q=k$:

$$\left\langle x_q, x_t \right\rangle = \int_a^b x_q(t) \cdot x_k(t) dt = \begin{cases} 1, & k = q \\ 0, & k \neq q \end{cases}$$

- Examples of orthogonal functions are Spreading codes used in CDMA and Sine functions used in OFDMA

Interference in CDMA

- Different users have different spreading-code, which is almost orthogonal
- If the orthogonality between the codes is perfect then no interference at the receiver.
- The cross correlation between two spreading sequences s_n og s_m is:

$$R_{nm}(\tau) = \frac{1}{T_b}\int_0^{T_b} s_n(t)\cdot s_m(t-\tau)dt$$

- Perfect orthogonality means that cross-correlation function is zero for all τ
- In practice orthogonality is not perfect, thus there is some interference
- In CDMA, there is a *soft capacity limit*, new users degrades signal quality a little bit for everyone, but there is no absolute limit to how many users may be allowed

Pseudo Noise (PN) Code Generator

- Periodic sequence of PN code can be generated with period 2^m-1 with an m-stage feedback shift register. Set-up consist of flip-flops and modulo-2 adder

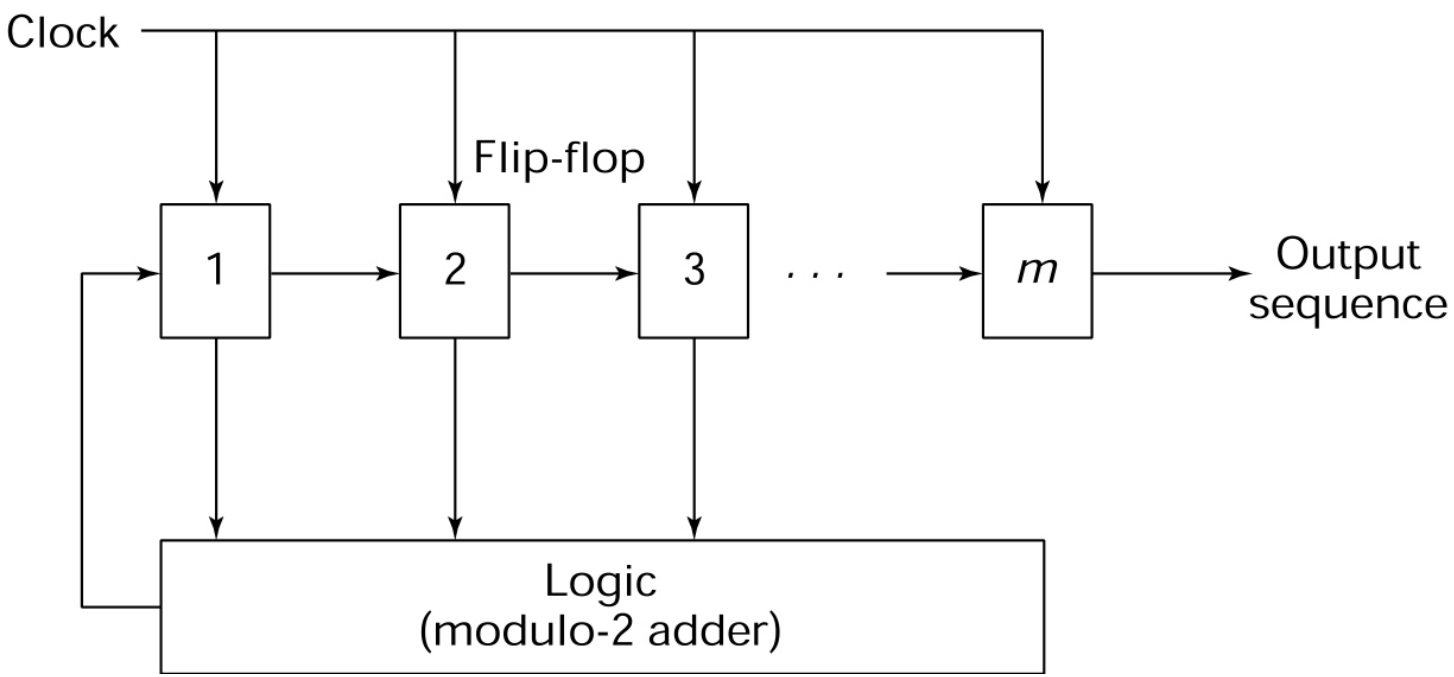

Multiple Access

- Introduction
- FDMA (Frequency Division Multiple Access)
- TDMA (Time Division Multiple Access)
- CDMA (Code Division Multiple Access)
- Spread Spectrum
  - Direct-sequence
  - Frequency Hopping
- OFDMA (Orthogonal Frequency Division Multiple Access)
- Summary

Spread Spectrum

- Spread spectrum is a generic term for techniques that spread the information over a wide frequency range (broadband)
- Can be various reasons for doing this, for example:
  - Avoid fast fading
  - Avoid jamming (especially in military applications)

- Available in two main types of spread spectrum:
  - Direct-Sequence
  - Frequency Hopping

- *CDMA uses direct sequence spread spectrum to achieve multiple access*

Direct Sequence Spread Spectrum (DSSS)

- A direct sequence spread-spectrum signal can be expressed as:

$$s_{DSSS}(t) = \sqrt{\frac{2E}{T}} m(t)\, p(t) \cos(2\pi f_0 t + \theta)$$

where $m(t)$ is the data to be transmitted, $p(t)$ is the PN chip sequence and θ is the phase at t=0

- Implementation example, BPSK modulation:

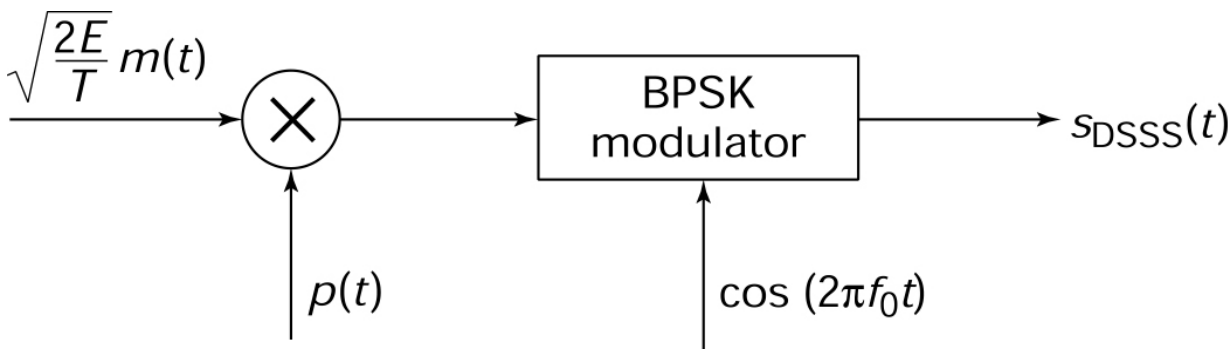

Interference suppression (I)

- The signal entering the receiver in the case of an additional non-spread BPSK interferent with amplitude A_{int} is:

$$c_{in}(t) = m(t)\,p(t)\,s(t) + A_{\text{int}}\,s(t)$$

  - where $s(t)$ is the BPSK signal.

- The total spectrum can be shown as:

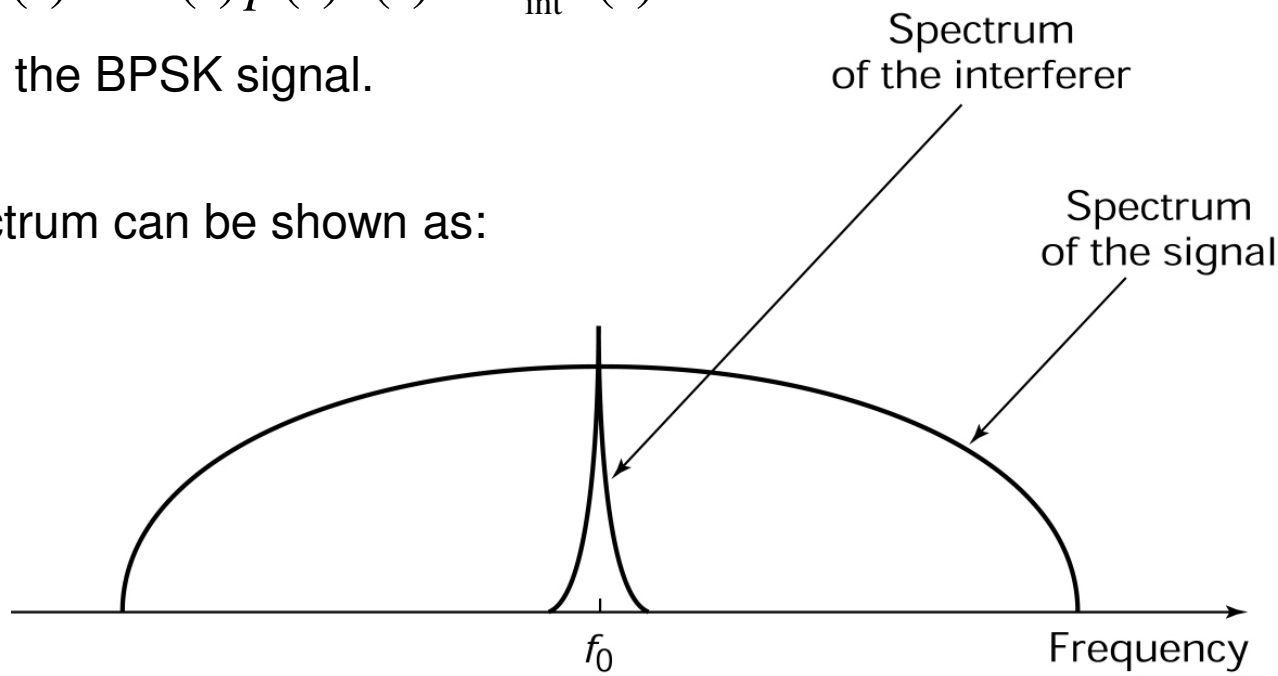

Interference suppression (II)

- After de-spreading (multiplying with the spreading code $p(t)$) the spectrum of the signal and interference looks like:

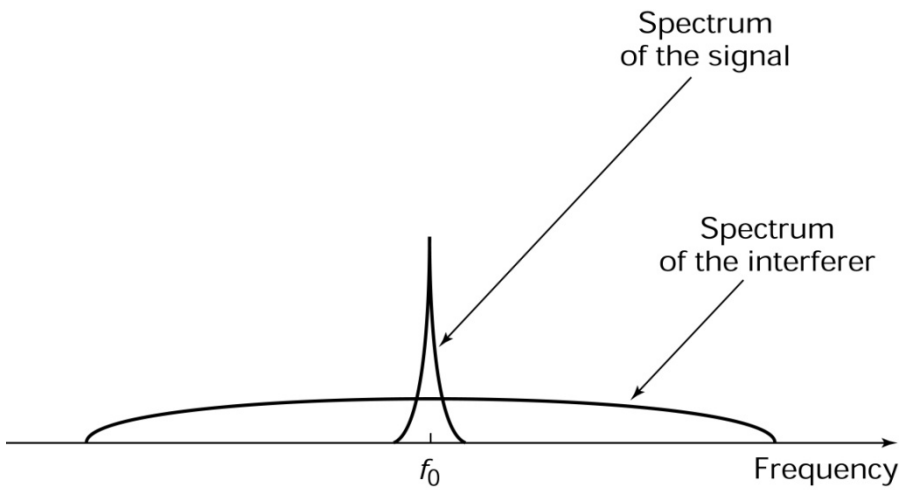

- The interference spectrum is now wide and the signal spectrum narrow
- The Signal-to-Noise Ratio (SNR) in the demodulator has been improved with a factor equal to the spreading factor K
- We call K the *processing gain*

- In the case that signal power = interference power:

$$p(e) = \frac{1}{2} erfc\sqrt{K}$$

CDMA demodulator (I)

- In a case with *k* CDMA users, where $m_i(t)$ is signal *i* og $p_i(t)$ is spreading code *i* the output from the de-spreader for user 1 becomes:

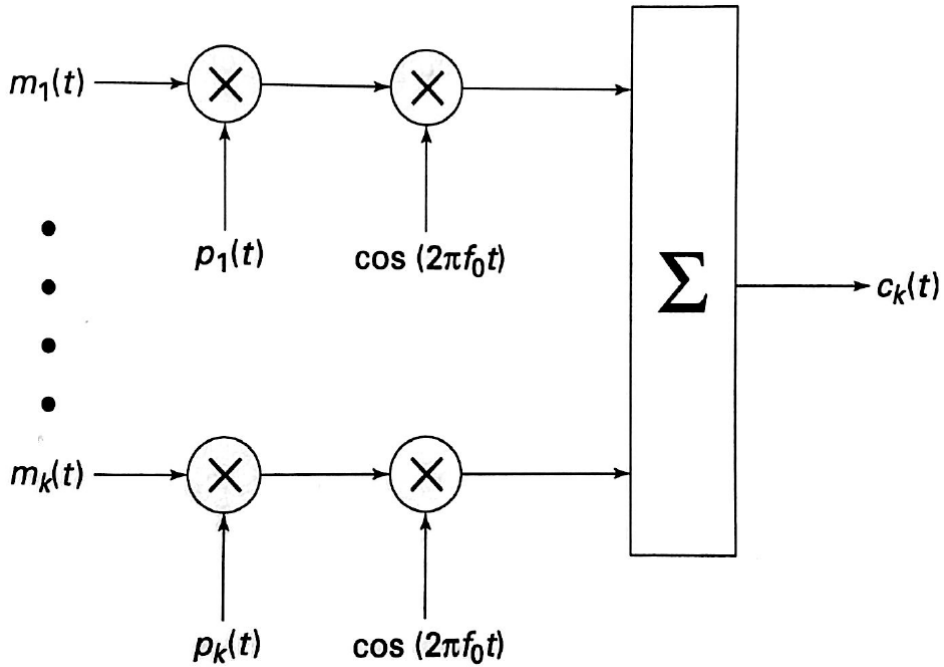

$$c_{k1}(t) = \sum_{i=1}^{k} m_i(t)\, p_i(t)\, p_1(t)\, s(t)$$

CDMA challenges

- The near-far problem:
  - If the interference and the signal has unequal power, the performence becomes worse
  - Some mobiles will be closer to the base station than others and unequal signal levels may occur.

- The near-far problem is counteracted by *power control*.
  - The nearest mobiles transmit with lower power, so that the received power at the base stations is almost the same for all mobiles
  - Power control is used in all CDMA systems

Frequency Hopping Spread Spectrum (FHSS)

- Hopping of carrier frequency at random fashion (instead of continuous broad signal). Set of possible frequencies used is referred as *hopset*
- The output of BPSK modulator and frequency synthesizer is applied to a mixer
- The *k*-bit chips of PN generator enables carrier freq. to hop over 2^k distinct values.

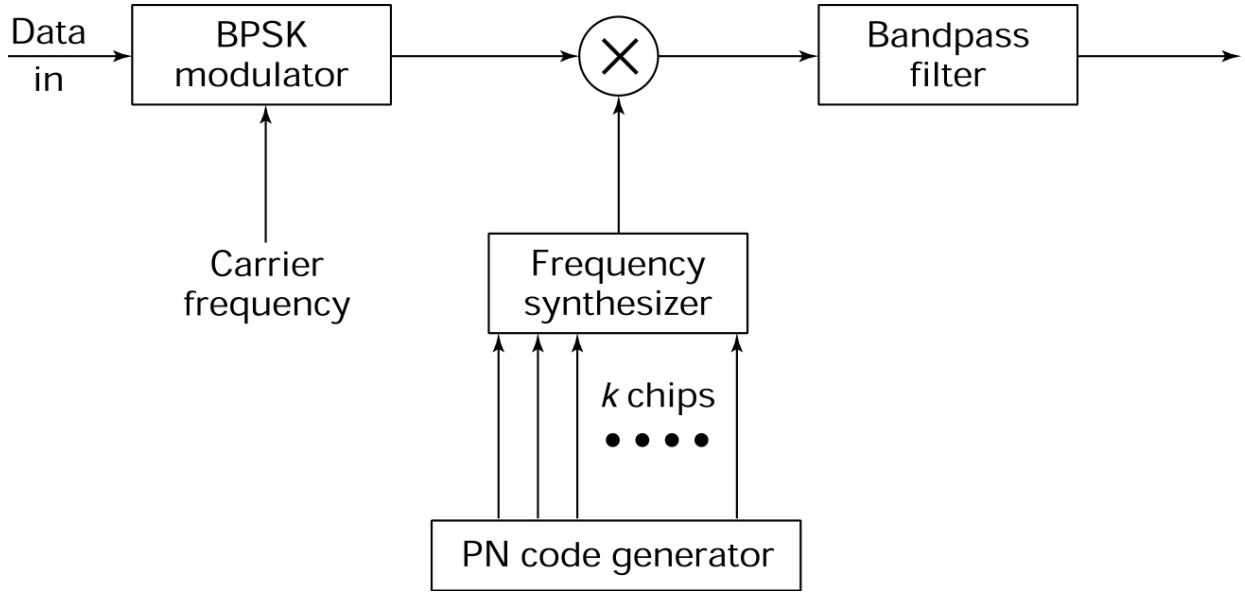

Frequency Hopping Spread Spectrum (FHSS)

- The rate at which frequency hops determines whether it is SFH or FFH
- In *slow frequency hopping* (SFH), hopping rate, R_h is lower than the symbol rate, R_s
- In *fast frequency hopping* (FFH), hopping rate, R_h is higher than the symbol rate, R_s

- In FH, a "chip" refers to the shortest uninterrupted signal. The chip rate, R_c for a FH system is:

  $R_c = \max [R_h, R_s]$

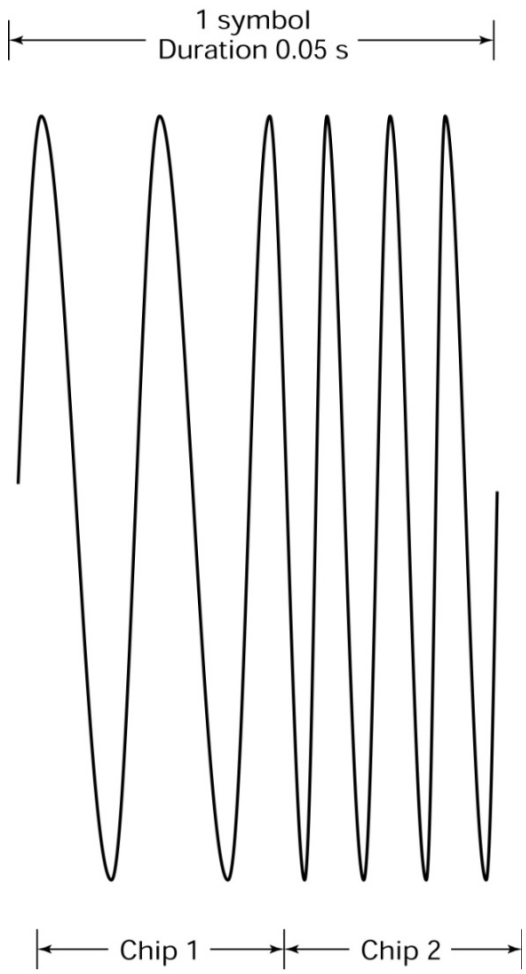

(*a*)

CDMA in UMTS (3G)

- The multiple access technique used in the 3G system UMTS is called WCDMA - *Wideband Code Division Multiple Access*
- WDCMA is a direct sequence CDMA system.
  - The chip rate is 3.84 Mc/s
- WCDMA is combined with FDMA. Each frequency carrier is allocated 5 MHz, so multiple operators can offer services without disturbing each other
  - An operator can also use more that one frequency carrier to increas the capacity in the network
- UMTS can use both TDD and FDD, but FDD is used almost everywhere

RAKE receiver

- In DS-CDMA, the chip duration is very narrow and under the assumption that multipath delays is larger than chip duration, those delayed version of chips are resolvable
- The figure shows a conceptual RAKE receiver. The different correlators are synchronized to various paths with different delays and programmed to captured the strongest signal

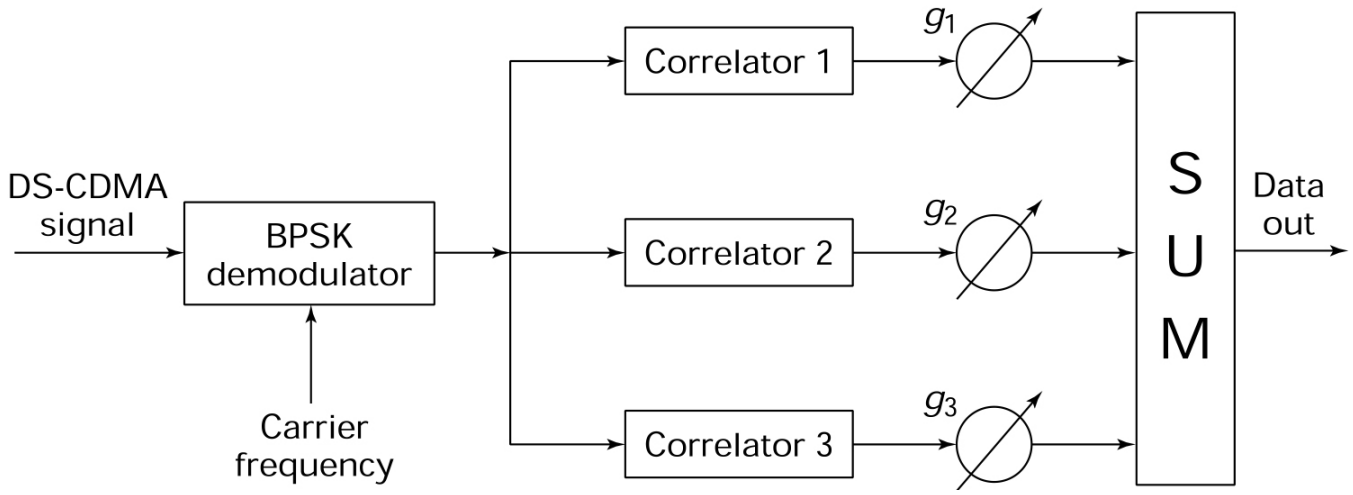

Multiple Access

- Introduction
- FDMA (Frequency Division Multiple Access)
- TDMA (Time Division Multiple Access)
- CDMA (Code Division Multiple Access)
- Spread Spectrum
  - Direct-sequence
  - Frequency Hopping
- OFDMA (Orthogonal Frequency Division Multiple Access)
- Summary

OFDMA – Orthogonal Frequency Division Multiple Access

- OFDMA is based on OFDM, where the carrying waves are distributed on multiple users
- By dividing the data stream many parallel narrowband signals we get long symbols, which reduces inter-symbol interference (ISI)
- Frequency selective fading can be suppressed by the fact that data is spread over several sub-carriers
- Interference from other users is suppressed due to the orthogonality between the carrying waves
- There is a fixed relationship between symbol length and separation between the carrying waves: $T_s \cdot \Delta f = 1$

OFDM – Orthogonal Frequency Division Multiplexing

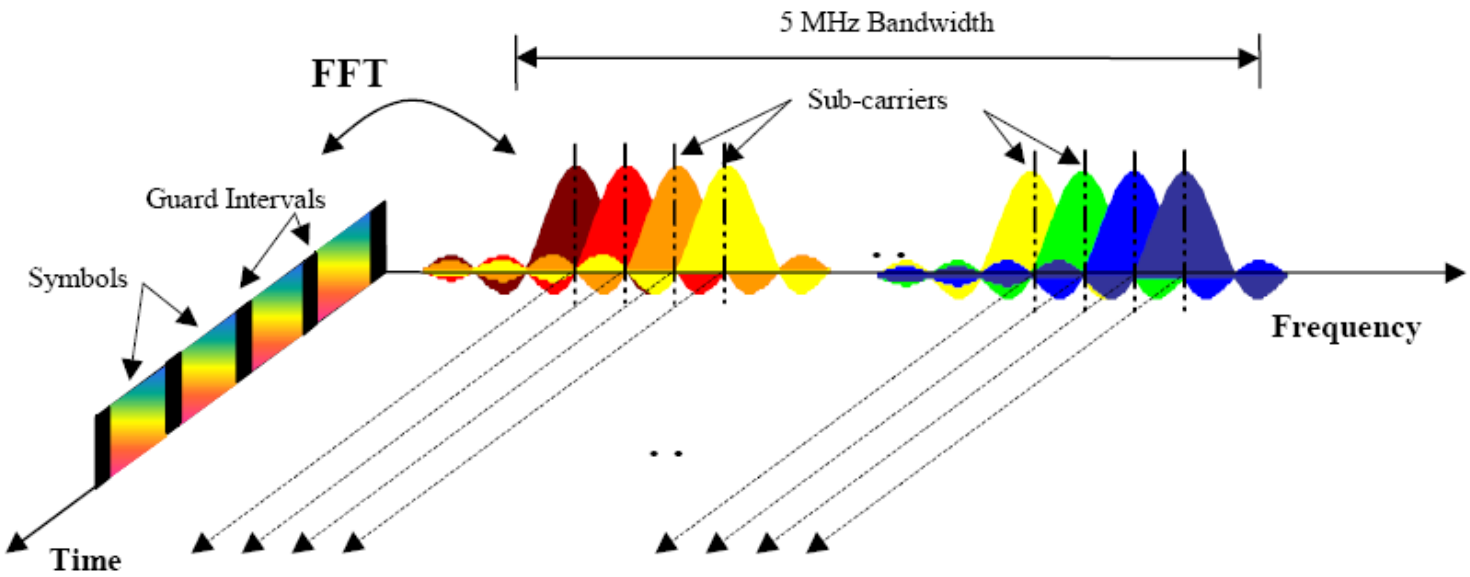

Orthogonality

- Two functions $x_q(t)$ og $x_k(t)$ are orthogonal over an interval [a,b] if the *inner-product* is 0 (zero) for all q og k, except when $q=k$:

$$\left\langle x_q, x_t \right\rangle = \int_a^b x_q(t) \cdot x_k(t) dt = \begin{cases} 1, & k = q \\ 0, & k \neq q \end{cases}$$

- If the interval [a,b] is of length T_s harmonic exponential functions (e.g. shaped signals) satisfy this criterion when the frequency difference is:

$$\Delta f = 1/T_s$$

Orthogonality of sine functions

- Sine functions are orthogonal when they have an integer number of periods in the symbol interval

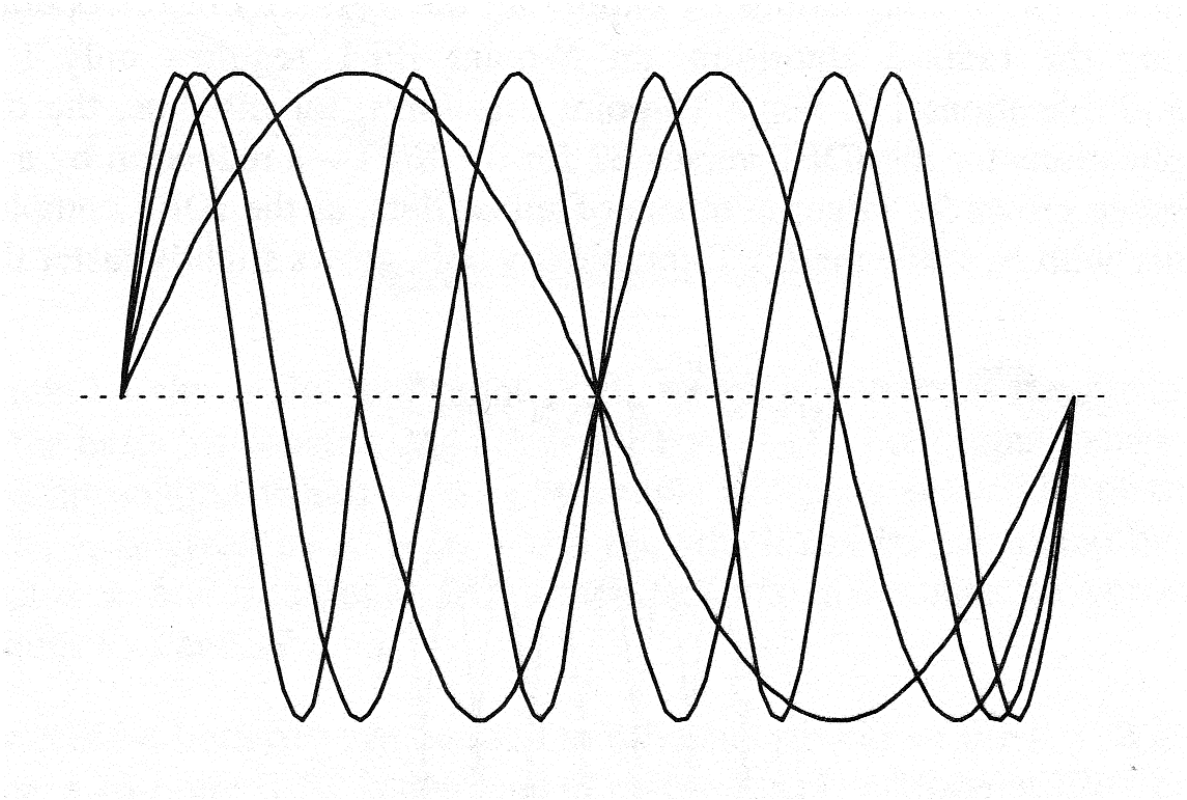

OFDM transmission system

- An OFDM signal can be constructed by using a «bank» of modulators
- The receiver can equally be constructed with a «bank» of correlators

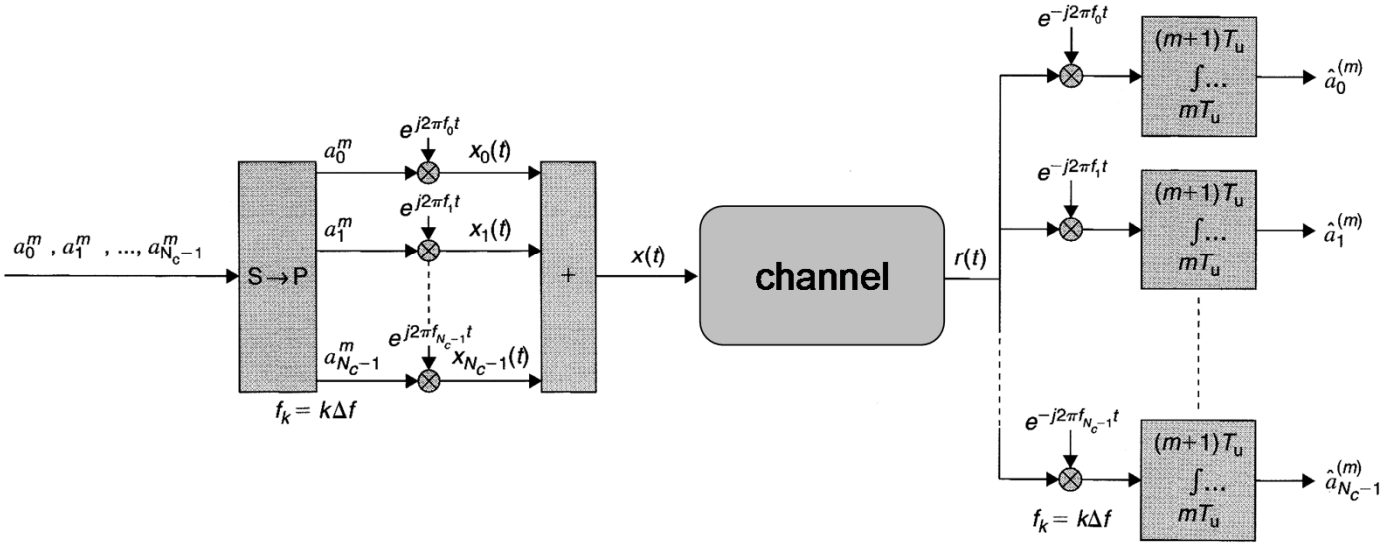

OFDM-implementation using FFT

- It is more practical to realize an OFDM system using the *Fast Fourier Transform* (FFT)

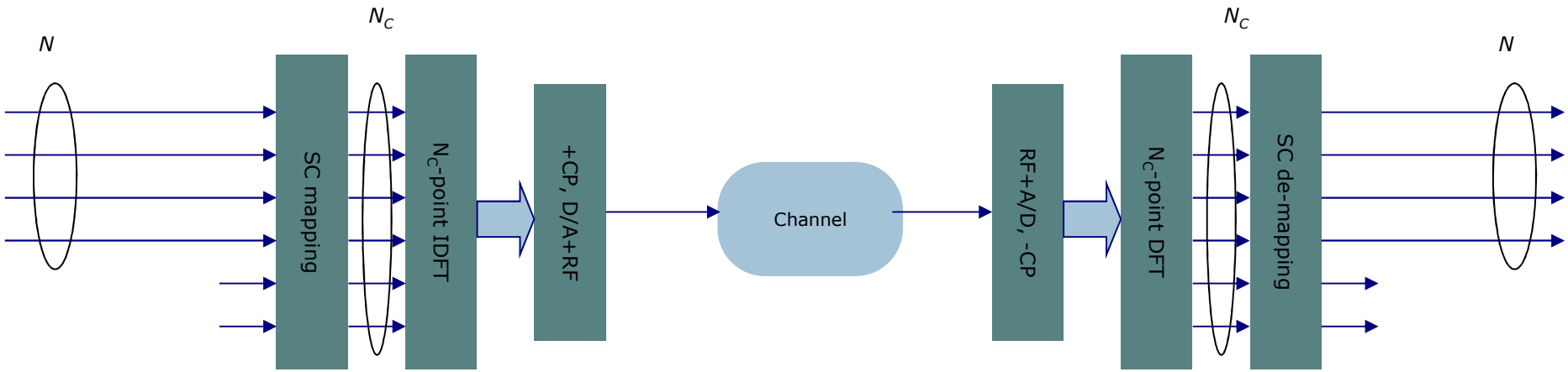

Cyclic prefix in OFDM

- Due to the long symbol times in OFDM ISI becomes less of a problem that in CDMA
- ISI is handled by adding a *guard interval* (GI) to the symbol
- To preserve orthogonality the GI is filled with a *cyclic prefix* - CP
- CP is a copy of the last part of the symbol and is put before the symbol
- The CP length is chosen to match the expected time dispertion of the channel
- GI/CP takes a bit of the channel capacity

a) Multipath introduces *inter-symbol-interference* (ISI)

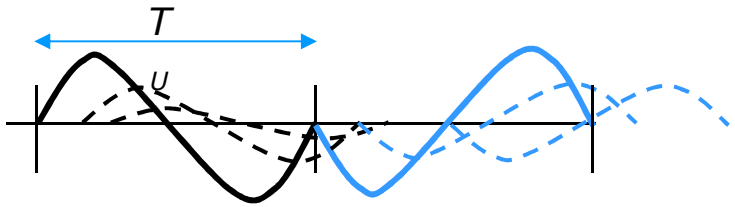

b) Prefix is added to avoid ISI

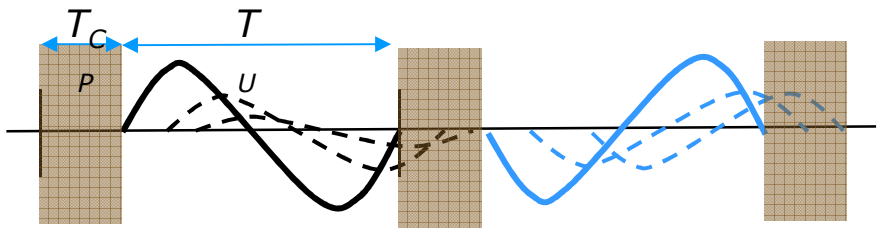

c) The prefix is made cyclic to avoid *inter-carrier-interference* (ICI) (maintain orthogonality)

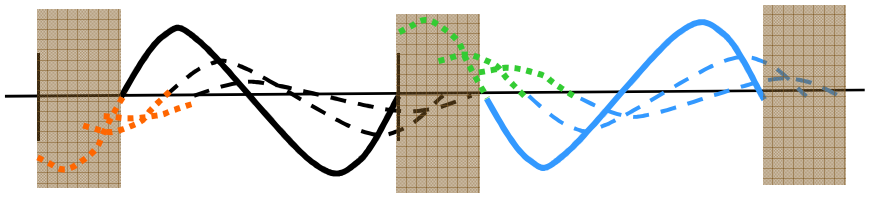

OFDM used for multiple access

- OFDM used for multiple access is called OFDMA
- Different users are allocated different subcarriers (SC)
- The allocation can be contiguous or distributed

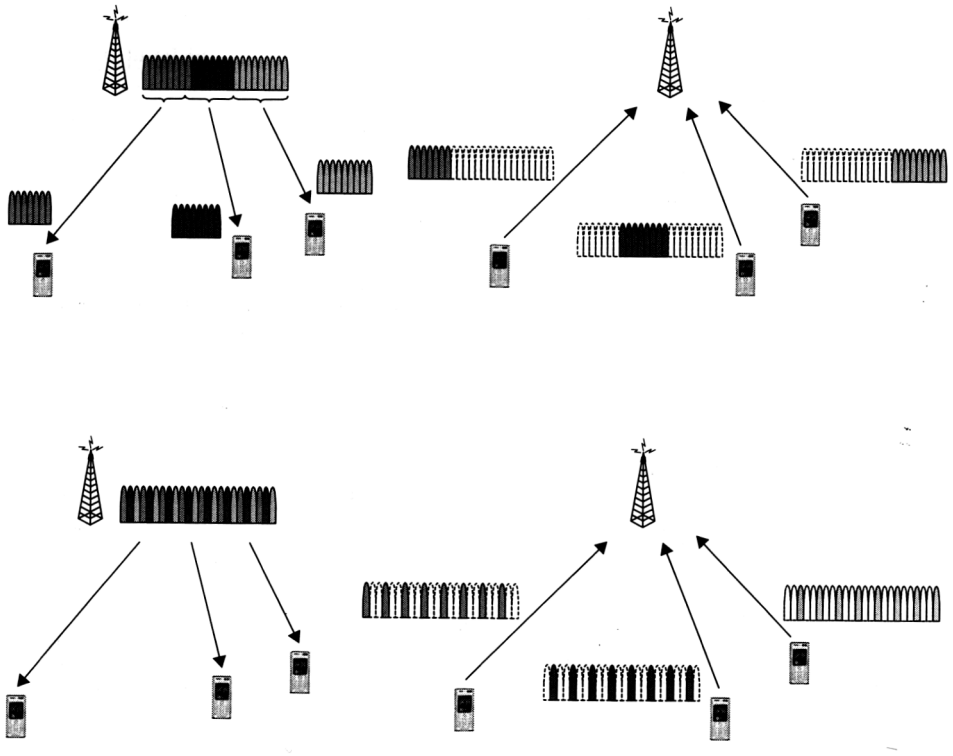

telenor group

OFDMA – Advantages and disadvanages

- Advantages
  - Robust against frequency selective fading and interference
  - Scalable bandwidth

- Disadvantages
  - High amplitude variation which gives high *peak to average power ratio* (PAPR). This increases in-band noise and BER (bit error rate)
  - Tight synchronization between users are required for FFT in receiver
  - Dealing CCI is more complex in OFDMA than CDMA

OFDMA used in LTE

- LTE – Long Term Evolution uses OFDMA as multiple access technique
  - The frequency distance is Δf = 15 kHz, the symbollength T_s = 66.67 µs
  - The Cyclic Prefix (CP) is T_{CP} = 5.21 (CP0) and 4.69 µs (CP1-6)
  - 7 symbols is called a ”slot”. It is 0.5 ms

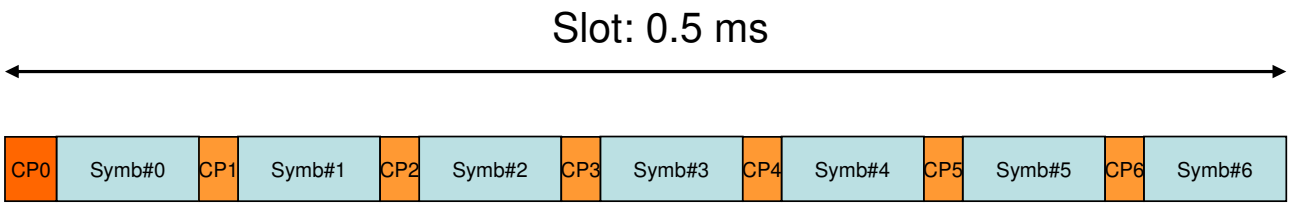

OFDMA used in LTE (II)

- The resource allocation (scheduling) in LTE is based on Resource Blocks (RB) consisting of 12 subcarriers og 7 symbols (180 kHz x 0.5 ms)
- Re-scheduling can happen every 2nd *slot*, i.e. once per millisecond

Resource element:
- 1 sub-carrier
- 1 OFDM symbol

Resource block:
- 12 sub-carriers
- 7 OFDM symbols

Scheduling unit:
- 2 resource blocks
- 1 ms interval (subframe)

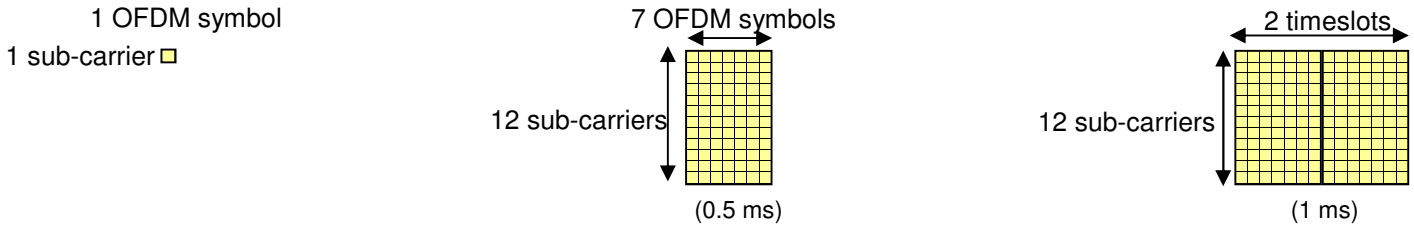

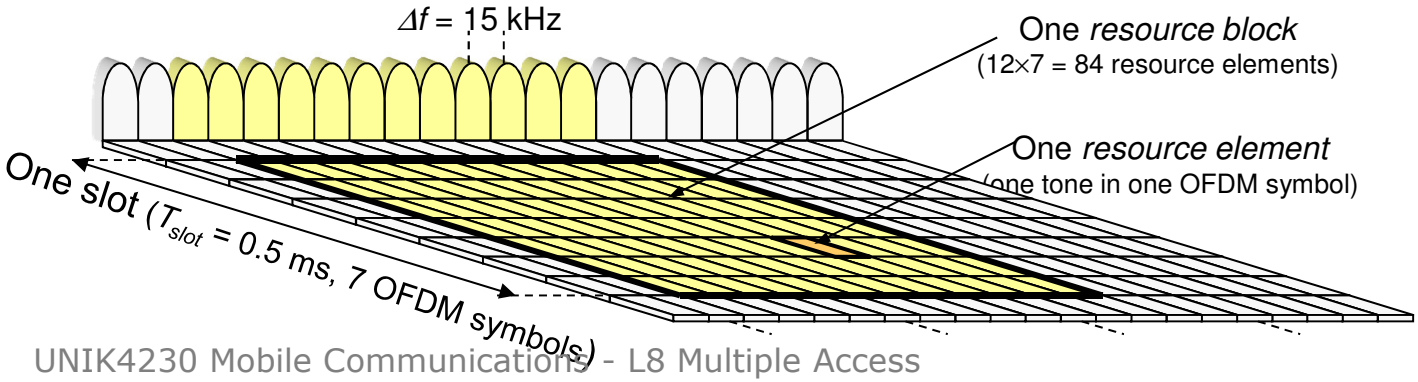

OFDMA used in LTE (III)

- LTE can be configured for different channel bandwidths, so-called Scalable OFDMA (S-OFDMA)

Supported system bandwidths [MHz]	1.4	3	5	10	15	20
FFT-size, N_{FFT}	128	256	512	1024	1536	2048
Occ. subcarriers	72	180	300	600	900	1200

- Both Frequency Division (FDD) og Time Division (TDD) Duplex is possible

Multiple Access

- Introduction
- FDMA (Frequency Division Multiple Access)
- TDMA (Time Division Multiple Access)
- CDMA (Code Division Multiple Access)
- Spread Spectrum
  - Direct-sequence
  - Frequency Hopping
- OFDMA (Orthogonal Frequency Division Multiple Access)
- Summary

Summary

- Multiple access allows multiple users the opportunity to share the available bandwidth
- FDMA is a simple scheme with each channel is allocated a frequency band. The main advantage is easy implementation, and that there is no need for synchronization and timing information. The main disadvantages are less flexibility in resource allocation and the need for very sharp cut-off filters.
- In TDMA users are separated in time. The main advantage (compared to FDMA) is the flexibility in resource allocation, and the possibility of variable data rate. The biggest drawback is the need for synchronization. TDMA schemes are also susceptible to fading.
- In CDMA each user is assigned a unique PN code. Each code consists of K chips, each with duration of T_c, and $KT_c = T$, the bit duration. Thus, CDMA uses a much larger bandwidth than TDMA or FDMA. All user share the same bandwidth all the time
- In CDMA, PN sequences are almost orthogonal to each other
- CDMA suppresses interference

Summary (contd.)

- Spread spectrum is a generic term for techniques that spread the information over a wide frequency range. There are two main types of spread spectrum:
  - Direct Sequence (used in CDMA)
  - Frequency Hopping

- In OFDMA orthogonal carrying waves are distributed on multiple users
  - This technique provides high robustness against frequency selective fading
  - Scalable OFDMA, which is used in LTE, provides the opportunity for flexible bandwidth utilization

Extra slides

PN Code Properties

- In each period of a sequence, the number of +1s is exactly one more than the number of -1s (The balance property)
- The auto correlation function has period KT_c.

- Auto correlation:

$$R_{nn}(\tau) = \frac{1}{T_b}\int_0^{T_b} s_n(t)\cdot s_n(t-\tau)dt$$

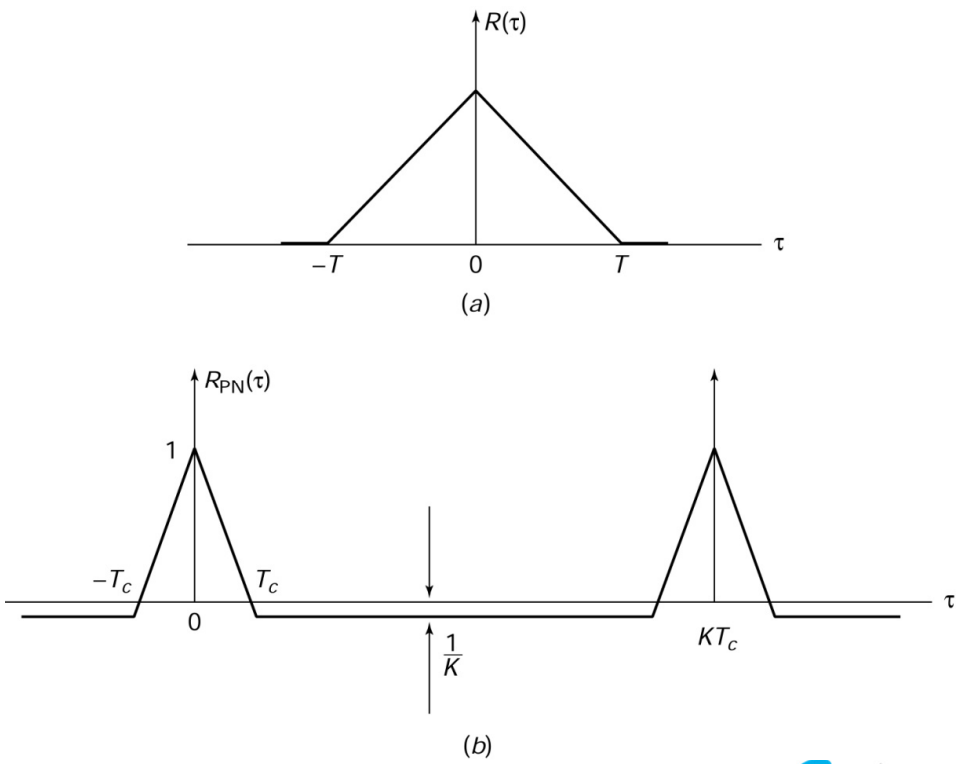

- (a) white noise
- (b) PN-sequence of length KT_c

BER performance of DSSS

- In an ideal channel (no fading) the performance is the same as standard BPSK
  - Multiplying with the PN code $p(t)$ in the transmitter and later in the receiver gicves no change in the signal level ($p(t)*p(t)=1$)
  - No change in the thermal noise (N_0)

$$p_{DSSS}(e) = p_{BPSK}(e) = \frac{1}{2} erfc\left(\sqrt{\frac{E}{N_0}}\right)$$

CDMA demodulator (II)

- The signal from the de-spreader can be written:

$$c_{k1\text{in}}(t) = signal + noise$$

  - Wher the noise depends on the cross-correlation between the spreading sequences $p_1 - p_k$:

$$Noise = \sum_{i=2}^{k} m_i(t)\, p_1(t)\, p_i(t)$$

- For *maximal-length sequences* the cross-correlation is $1/K$, and when all signals have the same power, the performance becomes (BPSK):

$$p(e) = \frac{1}{2} erfc\left[\sqrt{\frac{K}{k-1}}\right]$$

Codes in WCDMA

- In WCDMA there are two types of codes: *scrambling* and *channelization*
- Spread spectrum is achieved with the channelization codes
  - Used to separate traffic to/from individual users
  - Called *Orthogonal Variable Spreading Factor* (OVSF) codes
  - The spreading factor (SF) can vary between 1 and 128
  - The code length can be from 4 to 256 chips på uplink, up to 512 chips on the downlink
- The scrambling code does not increase the bandwidth, but is used to separate terminals on the uplink and cells/sectors on the downlink

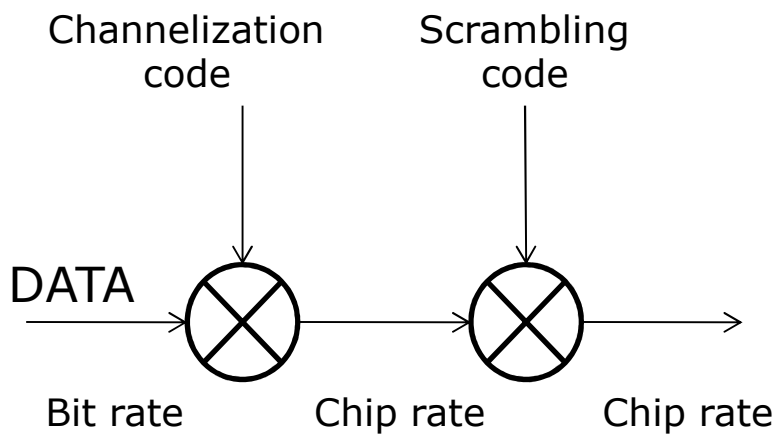

Spreading codes in WCDMA

- The channelization codes in WCDMA are hierarchical and defined using a code tree
- Example:
  - A voice telephony channel uses a code with SF = 128
  - A HSDPA connection using 3.5 Mb/s rate uses 5 codes, each with SF = 16

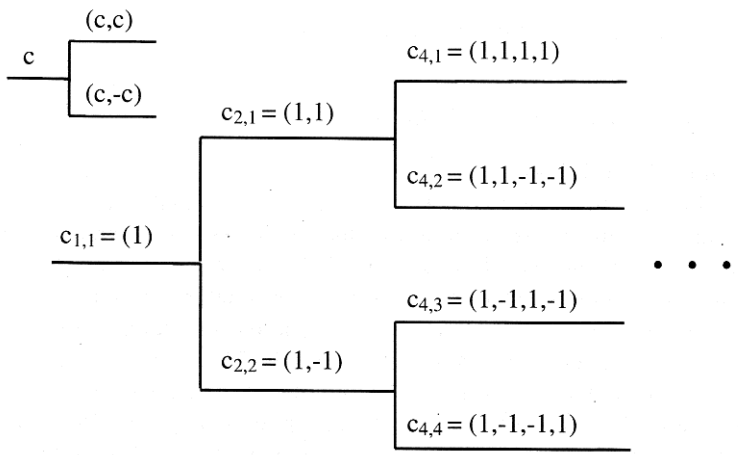

Kilde: Holma, Toskala, 2000

Amplitude variations in OFDM

- An OFDM signal is composed of many independently modulated symbols:

$$x(t) = \sum_{k=0}^{N_C-1} a_k \cdot e^{(j2\pi k\Delta f t)}$$

- Adding many sine-shaped carrier waves results in large amplitude variations
- The *Peak to Average Power Ratio* (PAPR) is the ratio between instantaneous power and average power
- The maximum value of this is given by the number of sub-carriers:

$$PAPR_{\max} = N_C$$

Example: BPSK, 8 subcarriers

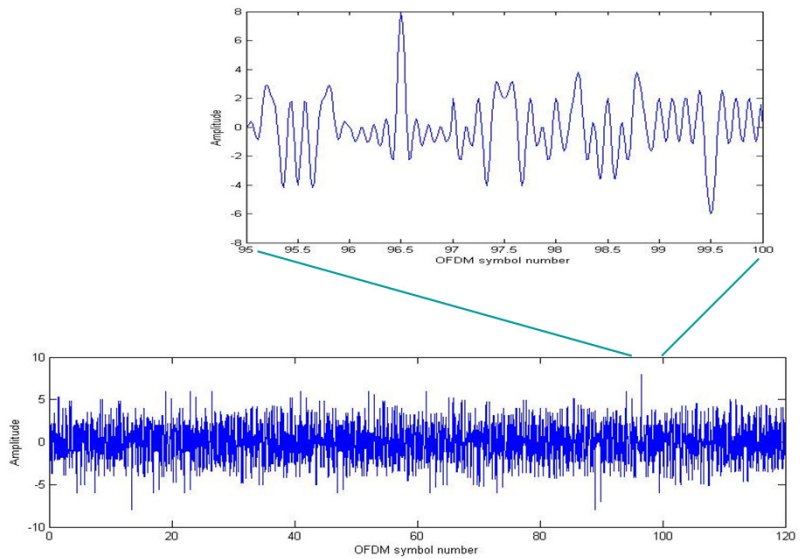

PAPR reduction methods

- Large PAPR is disadvantegous because the power amplifier must be over dimensioned to keep the signal within the linear area
- PAPR can be reduced in different ways:
  - Signal distortion: clipping, peak windowing
    - Results in reduced orthogonality and increased out of channel signal
  - Coding methods: avoiding symbols giving high PAPR using FEC codes, tone reseravtion or pre-coding techniques
    - Pre-coding is used in LTE uplink
  - Scrambling methods
    - Different scrambling sequences are tested and the one with the lowest PAPR is chosen

Symbol lengths and subcarrier distances

- Small subcarrier distance is advantegeous in giving a long symbol period. The GI/CP becomes relatively short and less capacity is lost
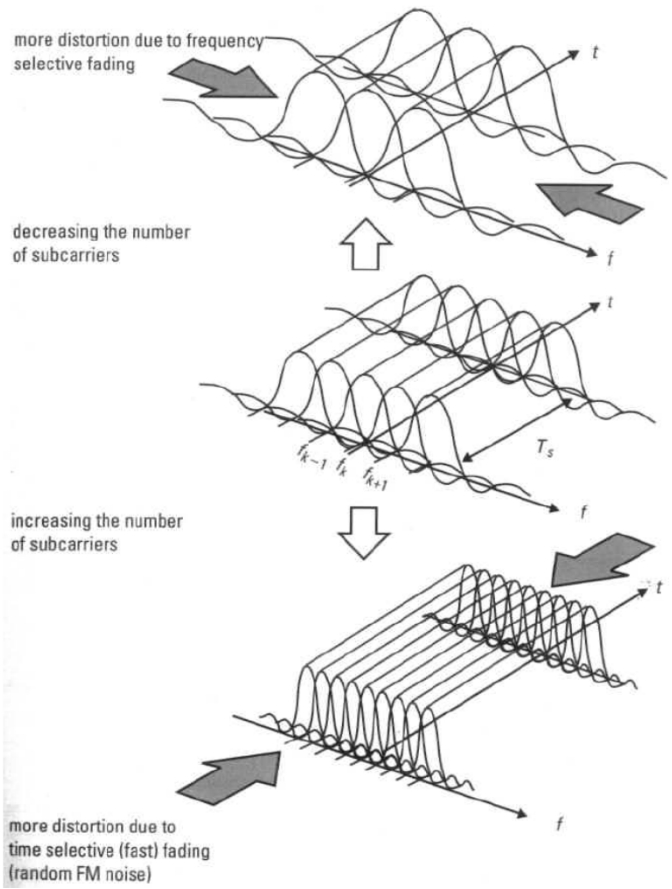
- Too small subcarrier distance increase the Doppler spread sensisitvity and other frequency inaccuracies